Specifications

Front Suspension

Item		Specification
Suspension type		MacPherson Strut
Shock absorber	Type	Gas
		A.S.D
Coil spring	Free Height [I.D. color]	318.1mm (12.52 in.) [Green - Green]
		312.8mm (12.31 in.) [Yellow - Yellow]

Rear Suspension

Item		Specification
Suspension type		Multi link
Shock absorber	Type	Gas
		A.S.D
Coil spring	Free Height [I.D. color]	330.1mm (12.99 in.) [Pink - Yellow]
		317.4mm (12.49 in.) [Pink - Orange]

Wheel & Tire

Item		Specification
Wheel	Steel	6.5J * 17
	Aluminum	6.5J * 17
		6.5J * 18
Tire		225/60 R17
		225/55 R18
Tire pressure	225/60R17	2.3+0.07kg/cm² (33+1.0psi)
	225/55R18	
	T155/90D16	4.2+0.07kg/cm² (60+1.0psi)

Wheel Alignment (Front)

Item		Specification	
		Front	Rear
Toe-in	Individual	0°±0.1°	0.1°±0.1°
	Total	0°±0.2°	0.2°±0.2°
Camber angle		-0.5°±0.5°	-1.0°±0.5°
Caster angle		4.02°±0.5°	-
King-pin angle		12.91°±0.5°	-

Tightening torque

Front Suspension

Item	Tightening torque (kgf.m)		
	Nm	Kgf.m	lb-ft
Hub nuts	88.3 ~ 107.9	9.0 ~ 11.0	65.1 ~ 79.6

mcx30.com

Strut assembly lock nut	44.1 ~ 58.8	4.5 ~ 6.0	32.5 ~ 43.4
Stabilizer link to strut assembly	98.1 ~ 117.7	10.0 ~12.0	72.3 ~ 86.8
Lower arm to sub frame (Front)	98.1 ~ 117.7	10.0 ~12.0	72.3 ~ 86.8
Lower arm to sub frame (Rear)	137.3 ~ 156.9	14.0 ~16.0	101.3 ~ 115.7
Lower arm to knuckle	98.1 ~ 117.7	10.0 ~12.0	72.3 ~ 86.8
Stabilizer bar to stabilizer link	98.1 ~ 117.7	10.0 ~12.0	72.3 ~ 86.8
Stabilizer bracket mounting bolts	44.1 ~ 53.9	4.5 ~ 5.5	32.5 ~ 39.8
Sub frame mounting bolts	176.5 ~ 196.1	18.0 ~ 20.0	130.2 ~ 144.7
Sub frame bracket mounting bolts	44.1 ~ 58.8	4.5 ~ 6.0	32.5 ~ 43.4
Tie rod end castle nut	34.3 ~ 44.1	3.5 ~ 4.5	25.3 ~ 32.5
Universal joint to pinion of steering gear	29.4 ~ 34.3	3.0 ~ 3.5	21.7 ~ 25.3
Roll rod mounting bolt & nut	107.9 ~ 127.5	11.0 ~ 13.0	79.6 ~ 94.0

Rear Suspension

Item		Tightening torque (kgf.m)		
		Nm	Kgf.m	lb-ft
Hub nuts		88.3 ~ 107.9	9.0 ~ 11.0	65.1 ~ 79.6
Trailing arm to body		98.1 ~ 117.7	10.0 ~12.0	72.3 ~ 86.8
Trailing arm to knuckle		34.3 ~ 53.9	3.5 ~ 5.5	25.3 ~ 39.8
Assist arm to sub frame		107.9 ~ 117.7	11.0 ~ 12.0	79.6 ~ 86.8
Assist arm to knuckle	2WD	44.1 ~ 53.9	4.5 ~ 5.5	32.5 ~ 39.8
	4WD	137.3 ~ 156.9	14.0 ~16.0	101.3 ~ 115.7
Lower arm to sub frame		107.9 ~ 117.7	11.0 ~ 12.0	79.6 ~ 86.8
Lower arm to knuckle		137.3 ~ 156.9	14.0 ~16.0	101.3 ~ 115.7
Upper arm to sub frame	2WD	137.3 ~ 156.9	14.0 ~16.0	101.3 ~ 115.7
	4WD	98.1 ~ 117.7	10.0 ~12.0	72.3 ~ 86.8
Upper arm to knuckle	2WD	137.3 ~ 156.9	14.0 ~16.0	101.3 ~ 115.7
	4WD	98.1 ~ 117.7	10.0 ~12.0	72.3 ~ 86.8
Shock absorber to frame		49.0 ~ 63.7	5.0 ~ 6.5	36.2 ~ 47.0
Shock absorber to knuckle		137.3 ~ 156.9	14.0 ~16.0	101.3 ~ 115.7
Stabilizer bar to stabilizer link		98.1 ~ 117.7	10.0 ~12.0	72.3 ~ 86.8
Stabilizer bar to sub frame		44.1 ~ 53.9	4.5 ~ 5.5	32.5 ~ 39.8
Sub frame mounting bolt & nut		156.9 ~ 176.5	16.0 ~ 18.0	115.7 ~ 130.2

Suspension System > General Information > Special Service Tools

Special Service Tools

Tool (Number and Name)	Illustration	Use
09546-26000 Strut spring compressor	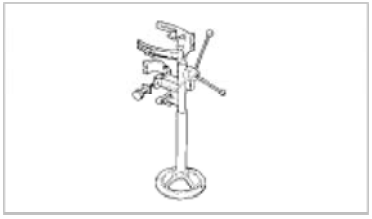	Compression of coil spring

mcx30.com

Troubleshooting

Symptom	Possible cause	Remedy
Hard steering	Improper front wheel alignment Excessive turning resistance of lower arm ball joint Low tire pressure No power assist	Correct Replace Adjust Repair and replace
Poor return of steering wheel to center	Improper front wheel alignment	Correct
Poor or rough ride	Improper front wheel alignment Malfunctioning shock absorber Broken or worn stabilizer Broken or worn coil spring Worn lower arm bushing	Correct Repair or replace Replace Replace Replace the lower arm assembly
Abnormal tire wear	Improper front wheel alignment Improper tire pressure Malfunctioning shock absorber	Correct Adjust Replace
Wandering	Improper front wheel alignment Poor turning resistance of lower arm ball joint Loose or worn lower arm bushing	Correct Repair Retighten or replace
Vehicle pulls to one side	Improper front wheel alignment Excessive turning resistance of lower arm ball joint Broken or worn coil spring Bent lower arm	Correct Replace Replace Repair
Steering wheel shimmy	Improper front wheel alignment Poor turning resistance of lower arm ball joint Broken or worn stabilizer Worn lower arm bushing Malfunctioning shock absorber Broken or worn coil spring	Correct Replace Replace Replace Replace Replace
Bottoming	Broken or worn coil spring Malfunctioning shock absorber	Replace Replace

Wheel /tire noise, vibration and harshness concerns are directly related to vehicle speed and are not generally affected by acceleration, coasting or decelerating. Also, out-of-balance wheel and tires can vibrate at more than one speed. A vibration that is affected by the engine rpm, or is eliminated by placing the transmission in Neutral is not related to the tire and wheel. As a general rule, tire and wheel vibrations felt in the steering wheel are related to the front tire and wheel assemblies. Vibrations felt in the seat or floor are related to the rear tire and wheel assemblies. This can initially isolate a concern to the front or rear.
Careful attention must be paid to the tire and wheels. There are several symptoms that can be caused by damaged or worn tire and wheels. Perform a careful visual inspection of the tires and wheel assemblies. Spin the tires slowly and watch for signs of lateral or radial runout. Refer to the tire wear chart to determine the tire wear conditions and actions

WHeel and tire diagnosis		
Rapid wear at the center	Rapid wear at both shoulders	Wear at one shoulder
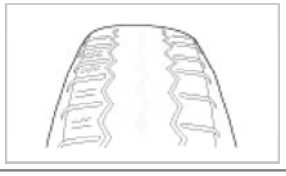	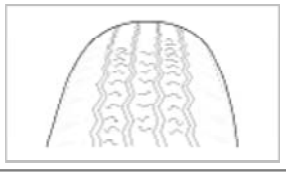	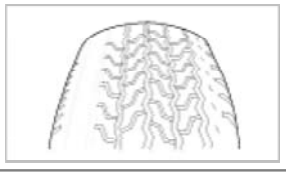
• Center-tread down to fabric due to	• Under-inflated tires	• Toe adjustment out of specification

mcx30.com

• Lack of rotation • Excessive toe on drive wheels • Heavy acceleration on drive	• Excessive cornering speeds • Lack of rotation	• Damaged strut • Damaged lower arm
Partial wear	Feathered edge	Wear pattern
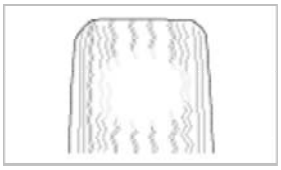	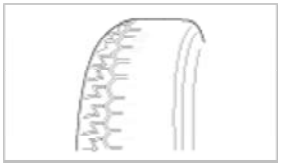	
• Caused by irregular burrs on brake drums	• Toe adjustment out of specification • Damaged or worn tie rods • Damaged knuckle	• Excessive toe on non-drive wheels • Lack of rotation

Suspension System > Front Suspension System > Components and Components Location

Components

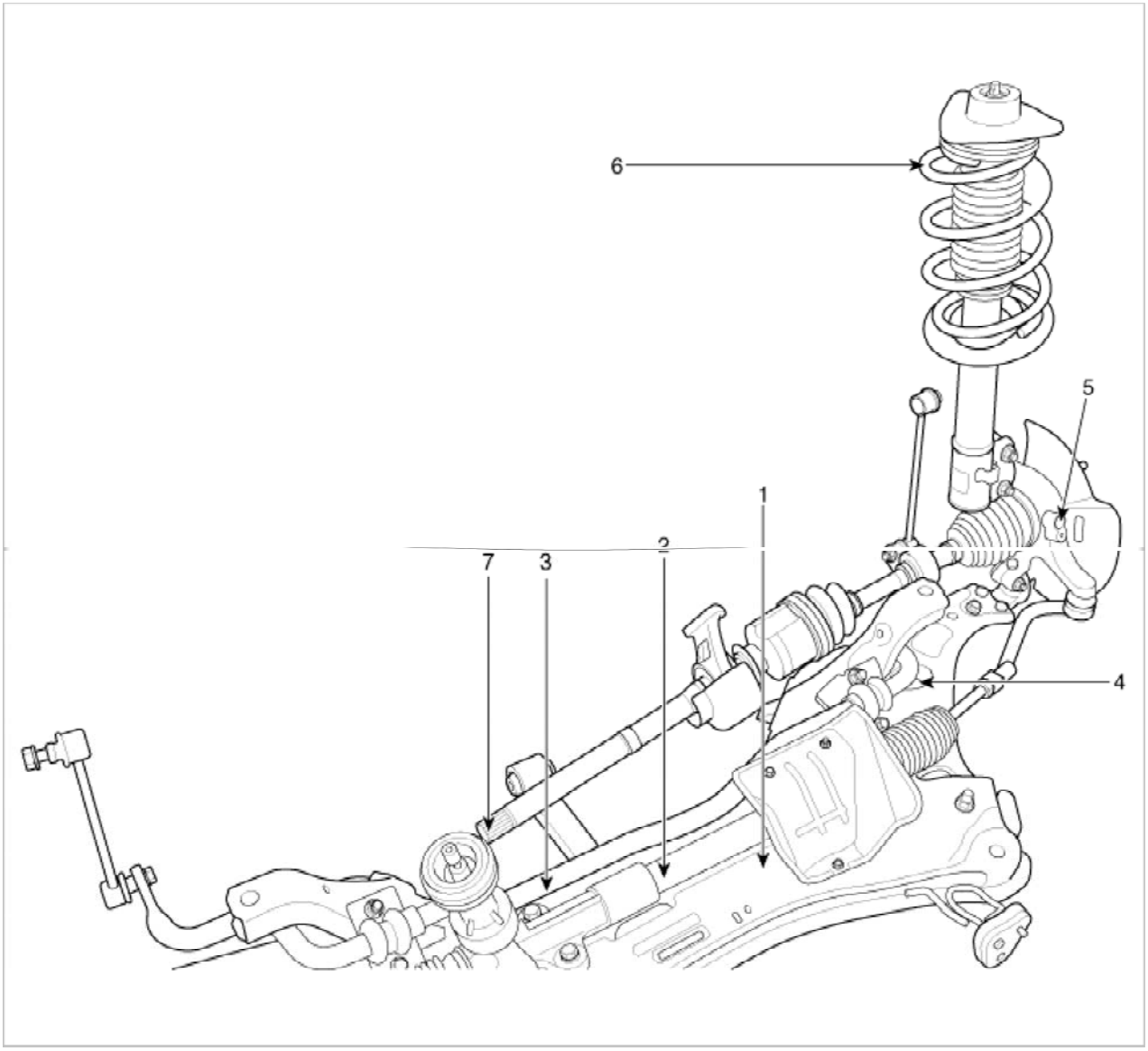

1. Sub frame 2. Steering gearbox	5. Front axle 6. Front strut assembly

mcx30.com

4. Front lower arm	

Suspension System > Front Suspension System > Front Strut Assembly > Components and Components Location

Components

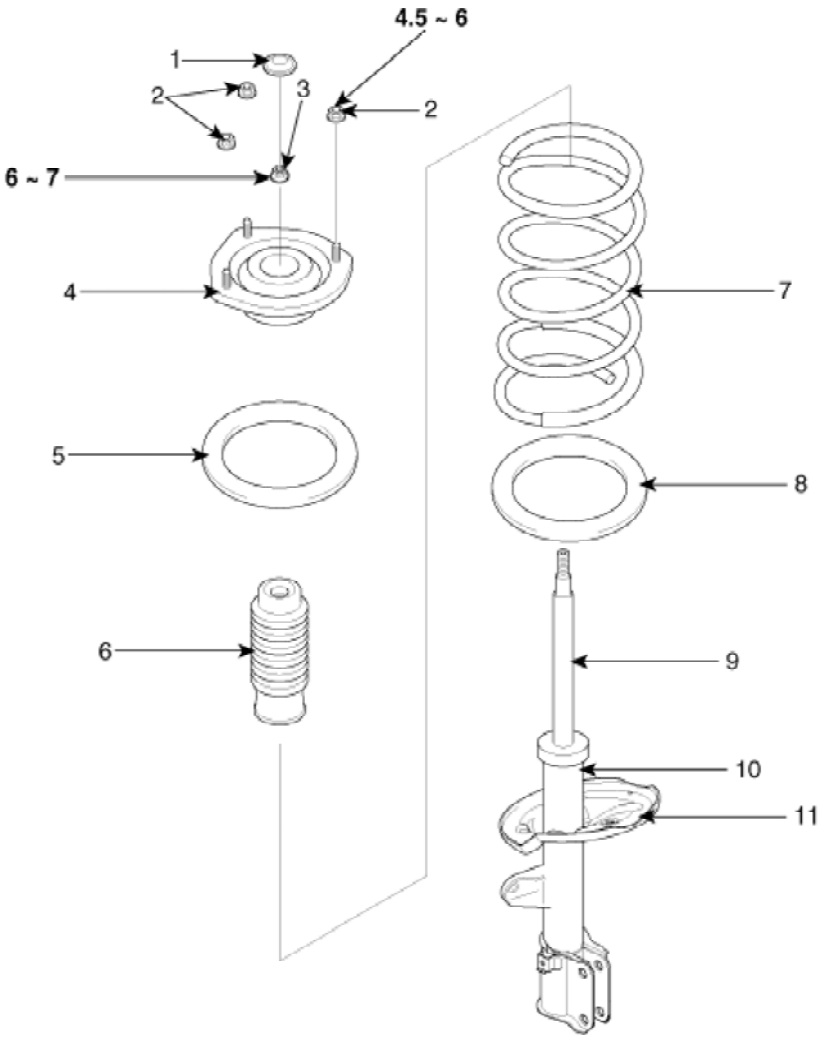

Torque : N.m (kgf.m, lb-ft)

1. Dust cover 2. Upper mounting nut 3. Self locking nut 4. Insulator	5. Spring upper pad 6. Strut dust cover & Bumper rubber 7. Coil spring 8. Spring lower pad	9. Piston rod 10. Strut assembly 11. Spring lower seat

Suspension System > Front Suspension System > Front Strut Assembly > Repair procedures

Replacement

1. Remove the front wheel & tire.

Tightening torque :

mcx30.com

CAUTION

Be careful not to damage to the hub bolts when removing the front wheel & tire.

2. Remove the brake hose(A) & wheel speed sensor bracket(B) from the front strut assembly by loosening mounting bolts.

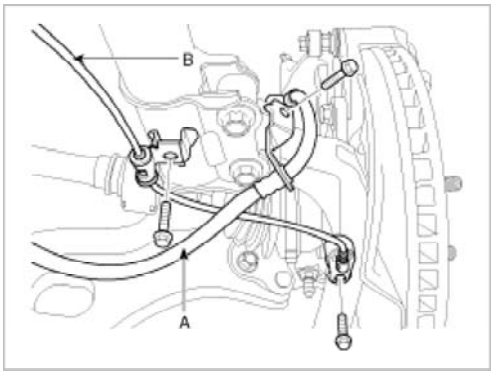

3. Disconnect the stabilizer link(B) with the front strut assembly(A) after loosening the nut.

Tightening torque :
98.1 ~ 117.7 N.m(10.0 ~ 12.0Kgf.m, 72.3 ~ 86.8lb-ft)

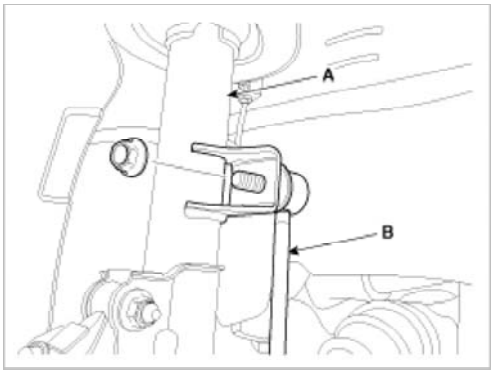

4. Disconnect the front strut assembly(A) with the knuckle by loosening the bolt & nut.

Tightening torque :
137.3 ~ 156.9N.m(14.0 ~ 16.0Kgf.m, 101.3 ~ 115.7lb-ft)

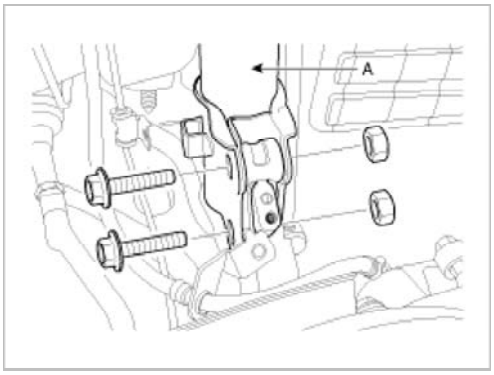

5. Remove the front strut assembly and than loosen the strut mounting nuts(A).

Tightening torque :
44.1 ~ 58.8N.m(4.5 ~ 6.0Kgf.m, 32.5 ~ 43.4lb-ft)

mcx30.com

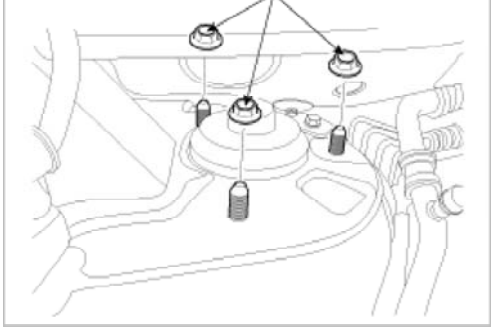

6. Installation is the reverse of removal.

Disassembly

1. Remove the dust cover(A).

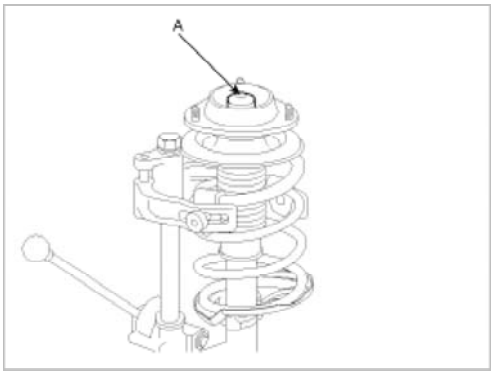

2. Using the special tool (09546-26000), compress the coil spring (A).

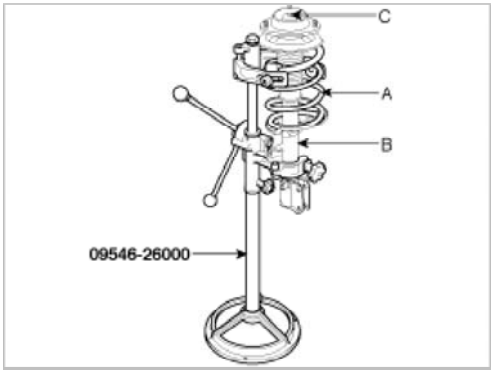

3. Remove the self-locking nut (C) from the strut assembly(B).
4. Remove the insulator, spring seat, coil spring and dust cover from the strut assembly.
5. Reassembly is the reverse of the disassembly.

Inspection

1. Check the strut bearing for wear and damage.
2. Check the spring upper and lower seat for damage and deterioration.
3. Compress and extend the piston rod (A) and check that there is no abnormal resistance or unusual sound during operation.

mcx30.com

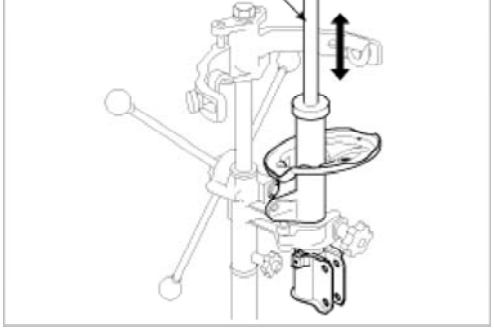

Disposal

1. Fully extend the piston rod.
2. Drill a hole on the A section to remove gas from the cylinder.

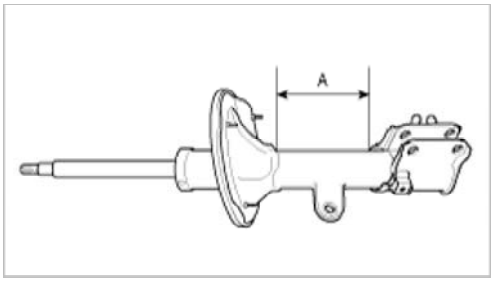

CAUTION

The gas coming out is harmless, but be careful of chips that may fly when drilling.
Be sure to wear safety goggles or eye protection when performing this task.

Suspension System > Front Suspension System > Front Lower Arm > Repair procedures

Replacement

1. Remove the front wheel & tire.

Tightening torque :
88.3 ~ 07.9N.m(9.0 ~ 11.0Kgf.m, 65.1 ~ 79.6lb-ft)

CAUTION

Be careful not to damage to the hub bolts when removing the front wheel & tire.Loosen the bolt & nut and then remove the lower arm(A).

2. Loosen the bolt & nut and then remove the lower arm(A).

Tightening torque :
98.1 ~ 117.7N.m(10.0 ~ 12.0Kgf.m, 72.3 ~ 86.6lb-ft)

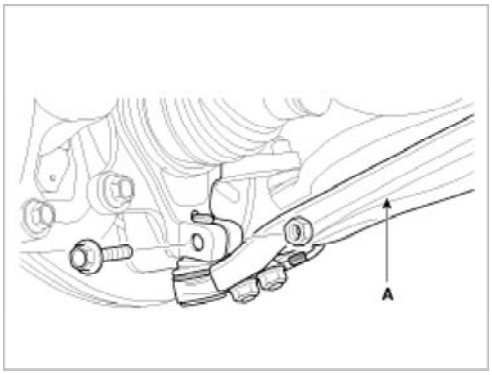

mcx30.com

Tightening torque :
Fornt
98.1 ~ 117.7N.m(10.0 ~ 12.0Kgf.m, 72.3 ~ 86.6lb-ft)
Rear
137.3 ~ 156.9N.m(14.0 ~ 16.0Kgf.m, 101.3 ~ 115.7lb-ft)

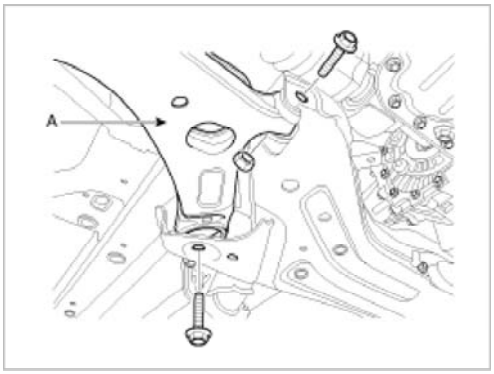

4. Installation is the reverse of removal.

Inspection

1. Check the bushing for wear and deterioration.
2. Check the lower arm for bending or breakage.
3. Check the lower arm for deformation.
4. Check the all bolts and nuts.

Suspension System > Front Suspension System > Front Stabilizer Bar > Repair procedures

Replacement

1. Remove the front wheel & tire.

Tightening torque :
88.3 ~ 107.9N.m(9.0 ~ 11.0Kgf.m, 65.1 ~ 79.6lb-ft)

> CAUTION
>
> Be careful not to damage to the hub bolts when removing the front wheel & tire.

2. Disconnect the stabilizer link(B) with the front strut assembly(A) after loosening the nut.

Tightening torque :
98.1 ~ 117.7N.m(10.0 ~ 12.0Kgf.m, 72.3 ~ 86.8lb-ft)

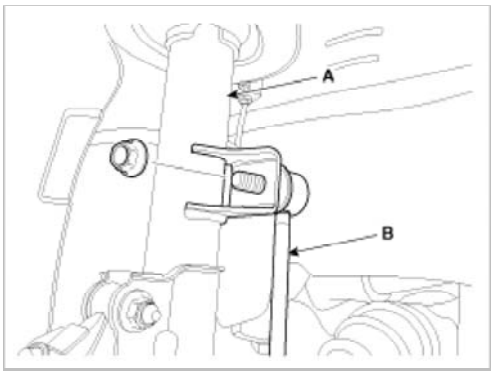

3. Remove the sprit pin and castle nut and then disconnect the tie-rod end(A) from the front knuckle.

mcx30.com

34.3 ~ 44.1N.m(3.5 ~ 4.5Kgf.m, 25.3 ~ 32.5lb-ft)

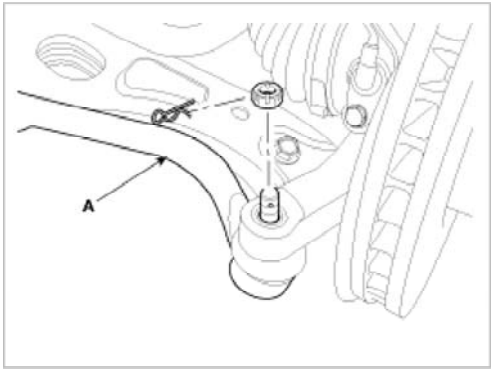

4. Loosen the bolt & nut and then remove the lower arm(A).

Tightening torque :
98.1 ~ 117.7N.m(10.0 ~ 12.0Kgf.m, 72.3 ~ 86.8lb-ft)

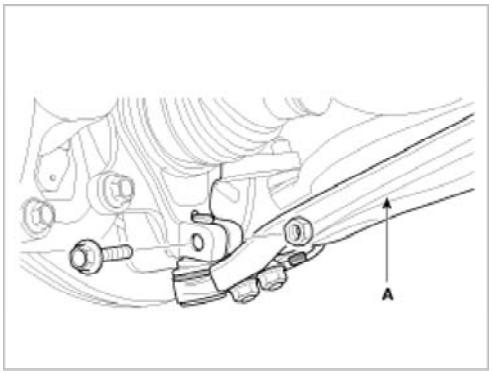

5. Loosen the nut and then remove the dust cover(A).

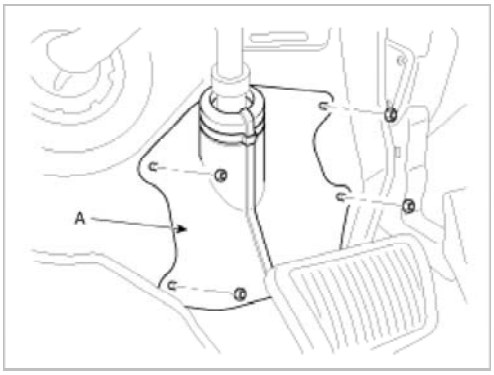

6. Loosen the bolt (A) and then disconnect the universal joint assembly from the pinion of the steering gear box.

Tightening torque :
29.4 ~ 34.3N.m(3.0 ~ 3.5Kgf.m, 21.7 ~ 25.3lb-ft)

mcx30.com

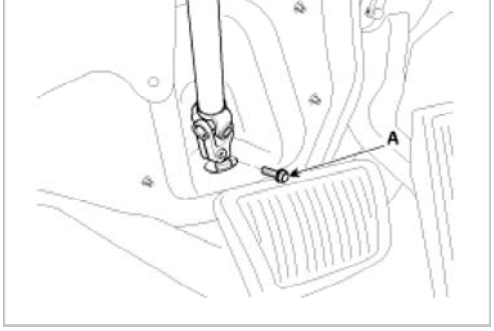

CAUTION

Lock the steering wheel in the straight ahead position to prevent the damage of the clock spring inner cable when you handle the steering wheel.

7. Loosen the bolt(A) & nut(B) and then remove the roll rod stopper.

Tightening torque :
107.9 ~ 127.5N.m(11.0 ~ 13.0Kgf.m, 79.6 ~ 94.0lb-ft)

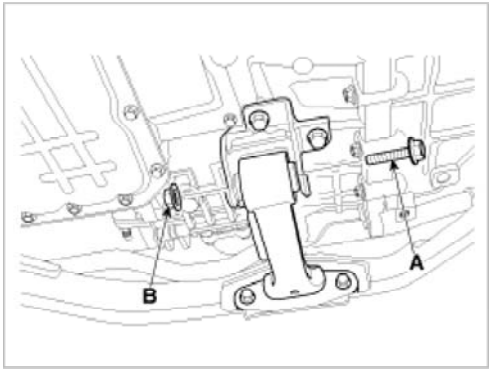

8. Disconnect the muffler rubber hanger(A).

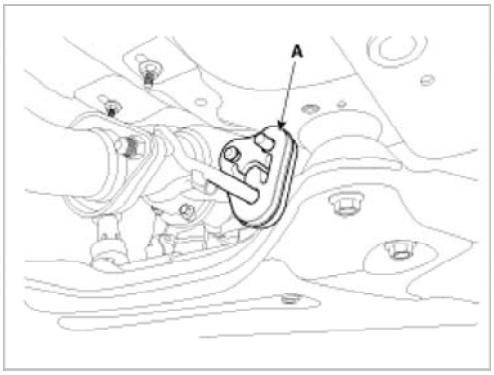

9. Loosen the bolts & nuts and then remove the sub frame.

Tightening torque :
176.5 ~ 196.1N.m(18.0 ~ 20.0Kgf.m, 130.2 ~ 144.7lb-ft)

mcx30.com

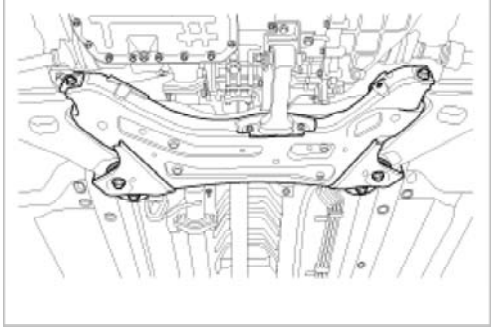

10. Loosen the bolt & nut and then remove the protactor(A).

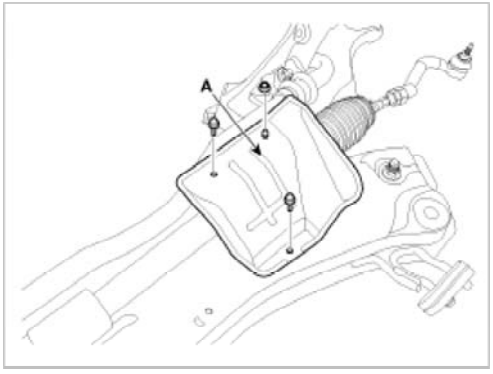

11. Loosen the bolt and then remove the stabilizer (A) from the sub frame.

Tightening torque :
44.1 ~ 53.9N.m(4.5 ~ 5.5Kgf.m, 32.5 ~ 39.8lb-ft)

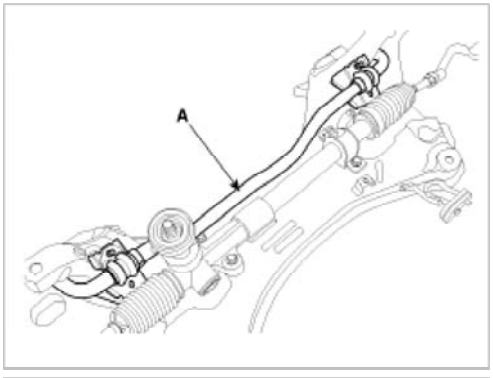

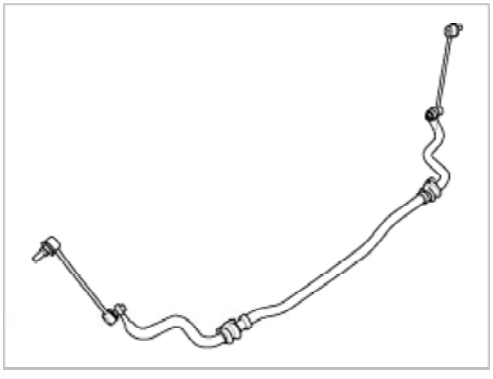

12. Installation is the reverse of removal.
13. Check the alignment.
    (Refer to 'Tires/Wheels - alingment')

Inspection

1. Check the bushing for wear and deterioration.

mcx30.com

3. Check the front stabilizer link ball joint for damage.

Suspension System > Front Suspension System > Front Cross Member > Repair procedures

Replacement

1. Remove the front wheel & tire.

Tightening torque :
88.3 ~ 107.9N.m(9.0 ~ 11.0Kgf.m, 65.1 ~ 79.6lb-ft)

CAUTION

Be careful not to damage to the hub bolts when removing the front wheel & tire.

2. Disconnect the stabilizer link(B) with the front strut assembly(A) after loosening the nut.

Tightening torque :
98.1 ~ 117.7N.m(10.0 ~ 12.0Kgf.m, 72.3 ~ 86.8lb-ft)

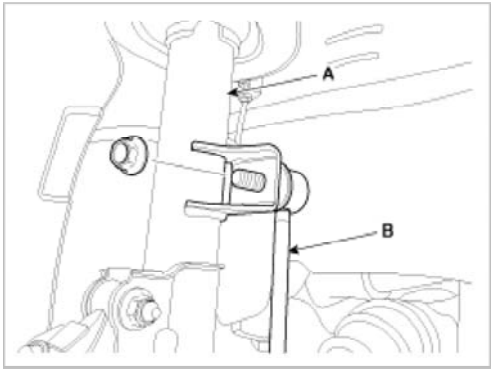

3. Remove the sprit pin and castle nut and then disconnect the tie-rod end(A) from the front knuckle.

Tightening torque :
34.3 ~ 44.1N.m(3.5 ~ 4.5Kgf.m, 25.3 ~ 32.5lb-ft)

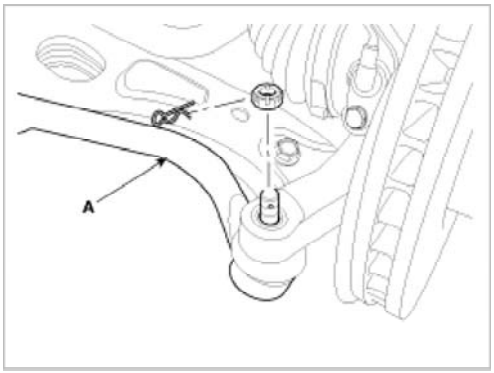

4. Loosen the bolt & nut and then remove the lower arm(A).

Tightening torque :
98.1 ~ 117.7N.m(10.0 ~ 12.0Kgf.m, 72.3 ~ 86.8lb-ft)

mcx30.com

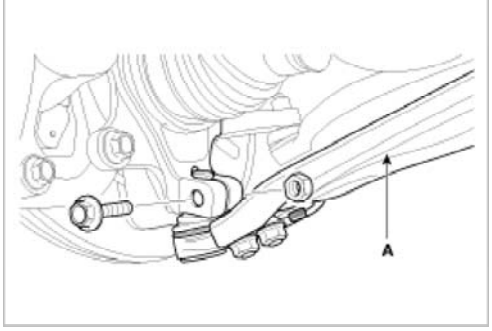

5. Loosen the nut and then remove the dust cover(A).

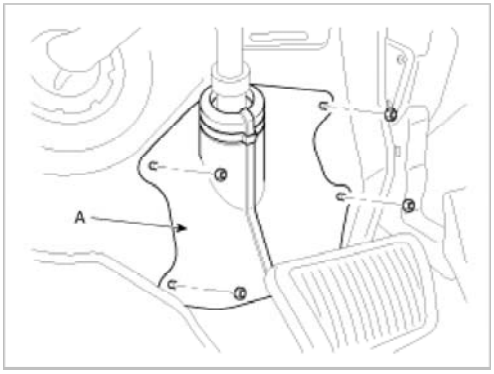

6. Loosen the bolt (A) and then disconnect the universal joint assembly from the pinion of the steering gear box.

Tightening torque :
29.4 ~ 34.3N.m(3.0 ~ 3.5Kgf.m, 21.7 ~ 25.3lb-ft)

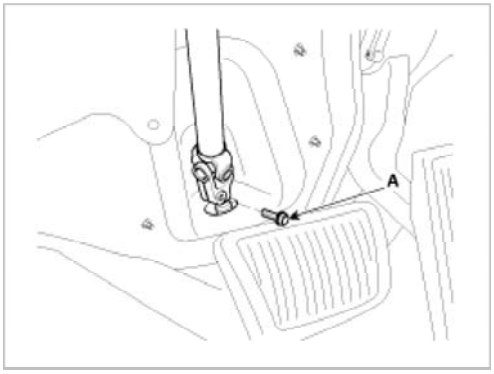

CAUTION

Lock the steering wheel in the straight ahead position to prevent the damage of the clock spring inner cable when you handle the steering wheel.

7. Loosen the bolt(A) & nut(B) and then remove the roll rod stopper.

Tightening torque :
107.9 ~ 127.5N.m(11.0 ~ 13.0Kgf.m, 79.6 ~ 94.0lb-ft)

mcx30.com

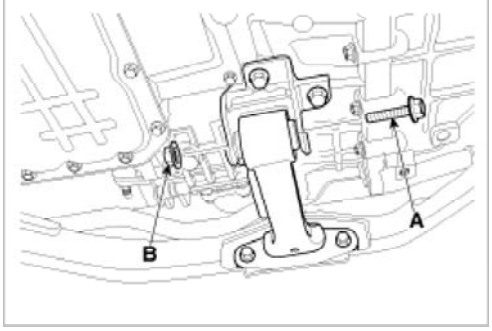

8. Disconnect the muffler rubber hanger(A).

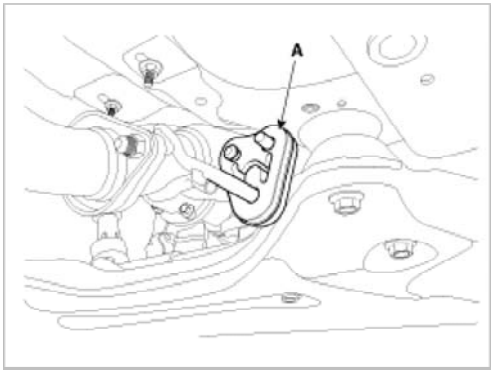

9. Loosen the bolts & nuts and then remove the sub frame.

Tightening torque :
176.5 ~ 196.1N.m(18.0 ~ 20.0Kgf.m, 130.2 ~ 144.7lb-ft)

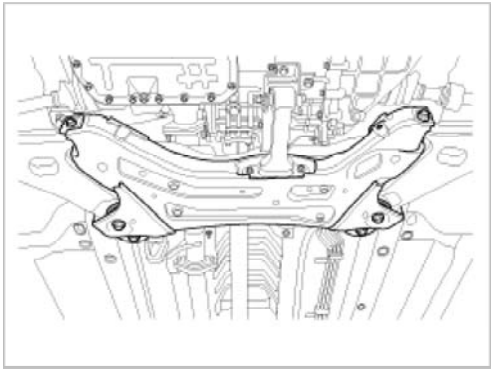

10. Remove the front lower arm.
    (Refer to 'Front Lower Arm')
11. Remove the front stabilizer.
    (Refer to 'Front Stabilizer Bar')
12. Remove the steering gearbox.
    (Refer to ST group - 'Steering Gearbox')
13. Installation is the reverse of removal.
14. Check the alignment.
    (Refer to 'Tires/Wheels - alingment')

Suspension System > Rear Suspension System > Components and Components Location

Components

mcx30.com

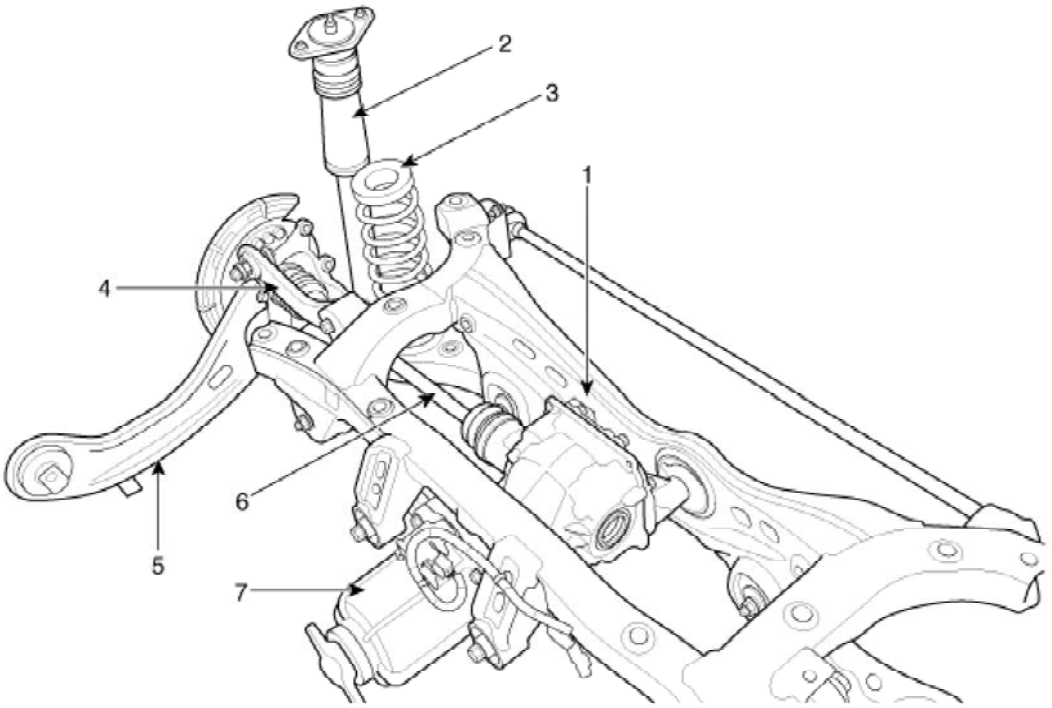

1. Sub frame 2. Shock absorber 3. Coil spring 4. Upper arm	5. Trailing arm 6. Drive shaft rear axle 7. Differential carrier

Suspension System > Rear Suspension System > Rear Shock Absorber > Components and Components Location

Components

mcx30.com

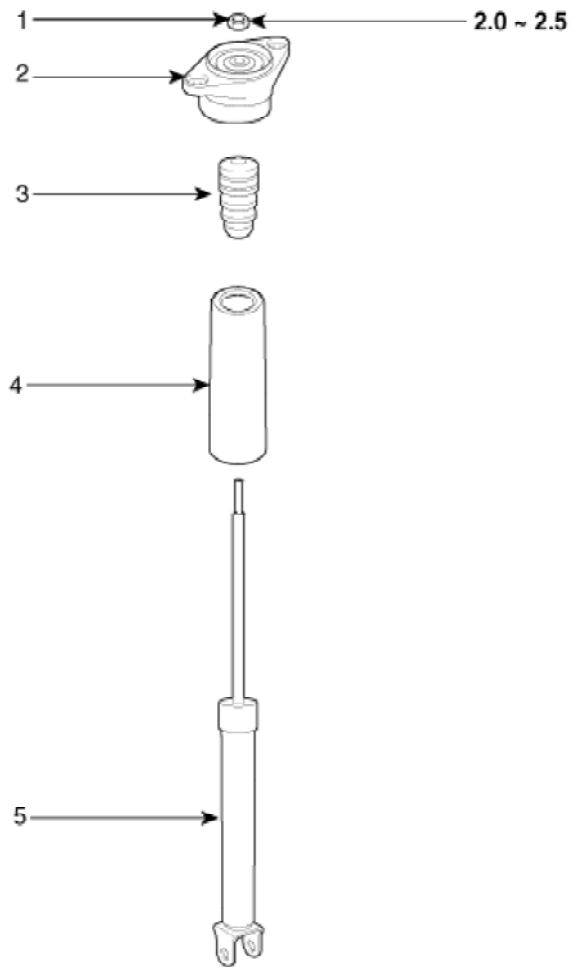

Torque : N.m (kgf.m, lb-ft)

1. Self locking nut 2. Bracket assembly 3. Bumper rubber	4. Dust cover 5. Shock absorber

Suspension System > Rear Suspension System > Rear Shock Absorber > Repair procedures

Replacement

1. Remove the rear wheel & tire.the rear wheel & tire.

Tightening torque :
88.3 ~ 107.9N.m(9.0 ~ 11.0Kgf.m, 65.1 ~ 79.6lb-ft)

CAUTION

Be careful not to damage to the hub bolts when removing the front wheel & tire.

2. Loosen the bolt & nut and then disconnect the shock absorber(A) with the rear axle.

Tightening torque :

mcx30.com

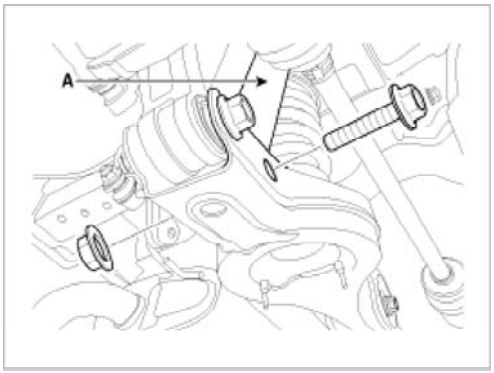

3. Loosen the shock absorber mounting bolts(A).

Tightening torque :
49.0 ~ 63.7N.m(5.0 ~ 6.5Kgf.m, 36.2 ~ 47.0lb-ft)

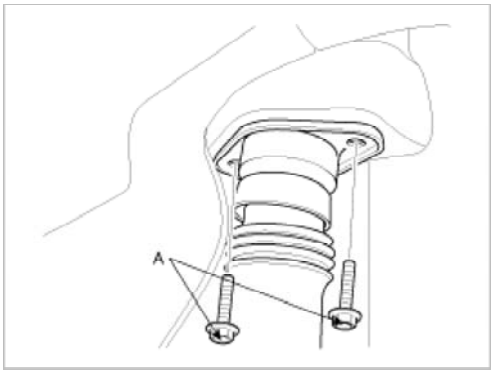

4. Installation is the reverse of removal.

Inspection

1. Check the rubber parts for damage or deterioration.
2. Check the shock absorber for abnormal resistance or unusual sounds.

Disposal

1. Fully extend the shock absorber rod.
2. Drill a hole to remove gas from the cylinder.

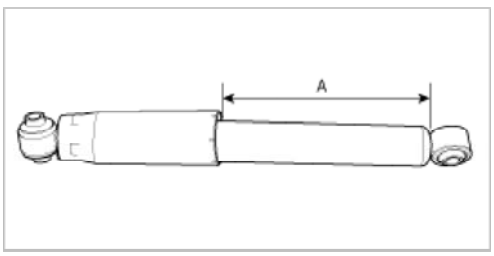

CAUTION

The gas coming out is harmless, but be careful of chips that may fly up when drilling. Be sure to use face shield and safety goggles.

Suspension System > Rear Suspension System > Rear Upper Arm > Repair procedures

Replacement

1. Remove the rear wheel & tire.

mcx30.com

88.3 ~ 107.9N.m(9.0 ~ 11.0Kgf.m, 65.1 ~ 79.6lb-ft)

> CAUTION
>
> Be careful not to damage to the hub bolts when removing the front wheel & tire.

2. Loosen the bolt & nut and then remove the rear upper arm(A) with the rear axle.

Tightening torque :
2WD
137.3 ~ 156.9N.m(14.0 ~ 16.0Kgf.m, 101.3 ~ 115.7lb-ft)
4WD
98.1 ~ 117.7N.m(10.0 ~ 12.0Kgf.m, 72.3 ~ 86.8lb-ft)

[2WD]

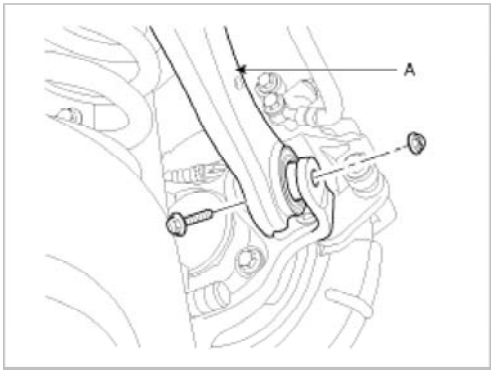

[4WD]

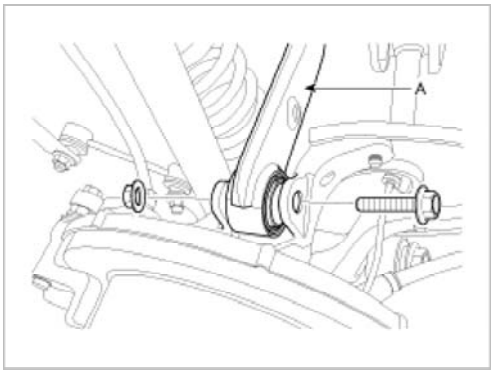

3. Loosen the bolt & nut and then remove the rear upper arm(A) with the sub frame.

Tightening torque :
2WD
137.3 ~ 156.9N.m(14.0 ~ 16.0Kgf.m, 101.3 ~ 115.7lb-ft)
4WD
98.1 ~ 117.7N.m(10.0 ~ 12.0Kgf.m, 72.3 ~ 86.8lb-ft)

[2WD]

mcx30.com

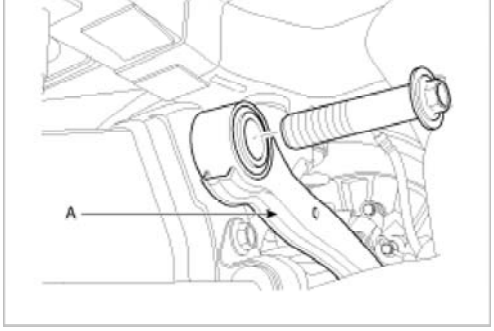

[4WD]

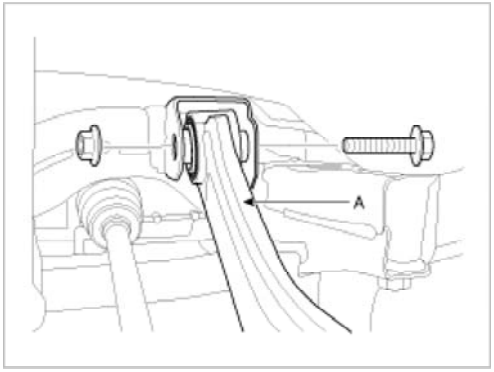

4. Installation is the reverse of removal.

Inspection

1. Check the bushing for wear and deterioration.
2. Check the rear upper arm or damage and deformation.
3. Check for all bolts and nut.

Suspension System > Rear Suspension System > Rear Lower Arm > Repair procedures

Replacement

1. Remove the rear wheel & tire.

Tightening torque :
88.3 ~ 107.9N.m(9.0 ~ 11.0Kgf.m, 65.1 ~ 79.6lb-ft)

CAUTION

Be careful not to damage to the hub bolts when removing the front wheel & tire.

2. Loosen the nut and then remove the rear stabilizer link(B) with the rear lower arm(A).

Tightening torque :
98.1 ~ 117.7N.m(10.0 ~ 12.0Kgf.m, 72.3 ~ 86.8lb-ft)

mcx30.com

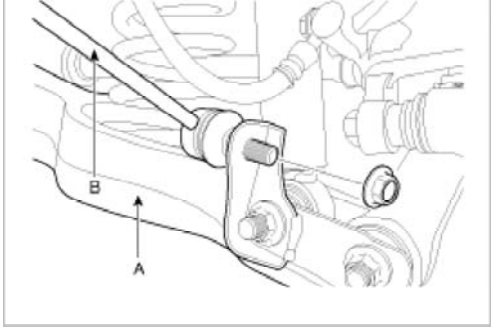

3. Loosen the bolt & nut and then remove the rear lower arm(A) with the rear axle.

Tightening torque :
137.3 ~ 156.9N.m(14.0 ~ 16.0Kgf.m, 101.3 ~ 115.7lb-ft)

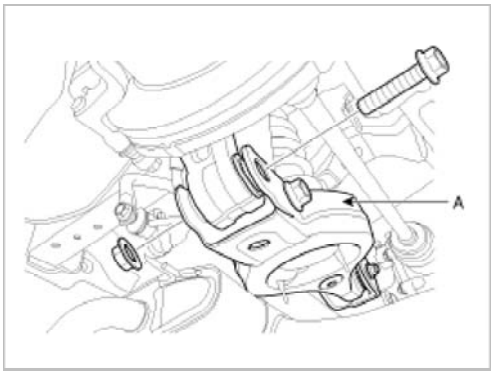

4. Loosen the bolt & nut and then remove the rear lower arm(B) with the sub frame(A).

Tightening torque :
107.9 ~ 117.7N.m(11.0 ~ 12.0Kgf.m, 79.6 ~ 86.8lb-ft)

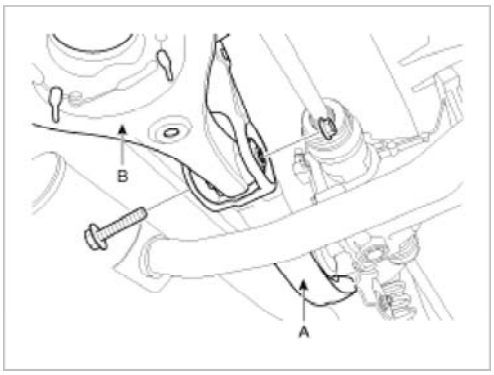

5. Installation is the reverse of removal.
6. Check the alignment.
   (Refer to 'Tires/Wheels - alingment')

Inspection

1. Check the bushing for wear and deterioration.
2. Check the rear lower arm for deformation.
3. Check the coil spring and spring pad for deterioration and deformation.
4. Check for all bolts and nut.

Suspension System > Rear Suspension System > Rear Stabilizer Bar > Repair procedures

Replacement

mcx30.com

Tightening torque :
88.3 ~ 107.9N.m(9.0 ~ 11.0Kgf.m, 65.1 ~ 79.6lb-ft)

CAUTION

Be careful not to damage to the hub bolts when removing the front wheel & tire.

2. Loosen the nut and then remove the rear stabilizer link(B) with the rear lower arm(A).

Tightening torque :
98.1 ~ 117.7N.m(10.0 ~ 12.0Kgf.m, 72.3 ~ 86.8lb-ft)

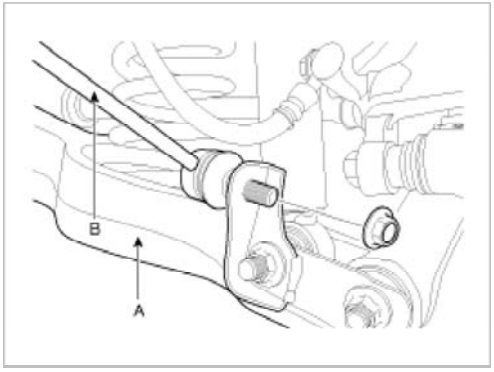

3. Loosen the mounting bolt and then remove the stabilizer bar(A) with the sub frame.

Tightening torque :
44.1 ~ 53.9N.m(4.5 ~ 5.5Kgf.m, 32.5 ~ 39.8lb-ft)

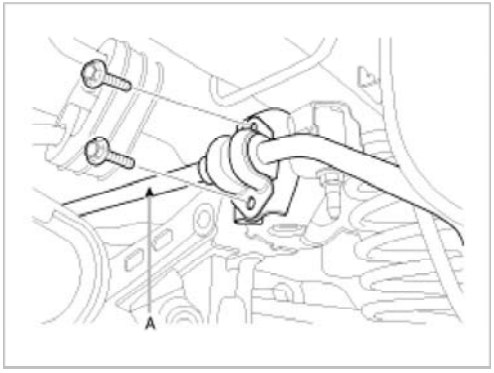

4. Installation is the reverse of removal.

Inspection

1. Check the rear stabilizer bar for deformation.
2. Check the rear stabilizer link ball joint for damage.

Suspension System > Rear Suspension System > Rear Assist Arm > Repair procedures

Replacement

1. Remove the rear wheel & tire.

Tightening torque :
88.3 ~ 107.9N.m(9.0 ~ 11.0Kgf.m, 65.1 ~ 79.6lb-ft)

CAUTION

mcx30.com

2. Remove the sprit pin and castle nut or bolt and then disconnect the rear assist arm(A) from the rear axle.

Tightening torque :
2WD
44.1 ~ 53.9N.m(4.5 ~ 5.5Kgf.m, 32.5 ~ 39.8lb-ft)
4WD
137.3 ~ 156.9N.m(14.0 ~ 16.0Kgf.m, 101.3 ~ 115.7lb-ft)

[2WD]

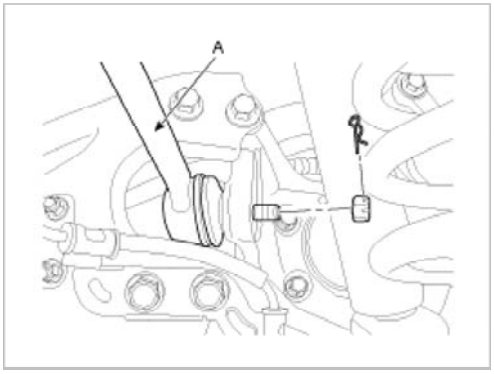

[4WD]

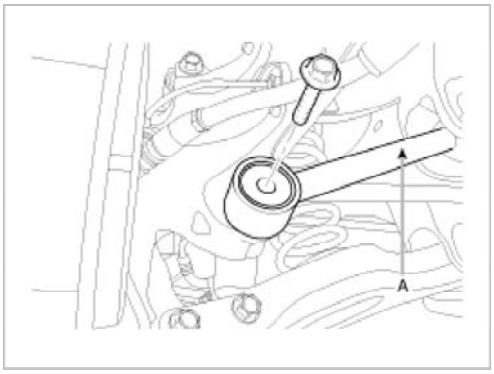

3. Loosen the bolt & nut and then remove the rear assist arm(A) with the sub frame.

Tightening torque :
107.9 ~ 117.7N.m(11.0 ~ 12.0Kgf.m, 79.6 ~ 86.8lb-ft)

[2WD]

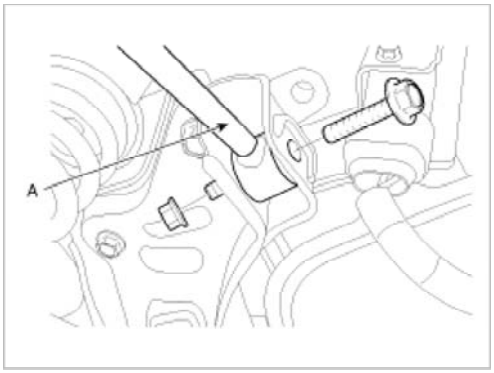

[4WD]

mcx30.com

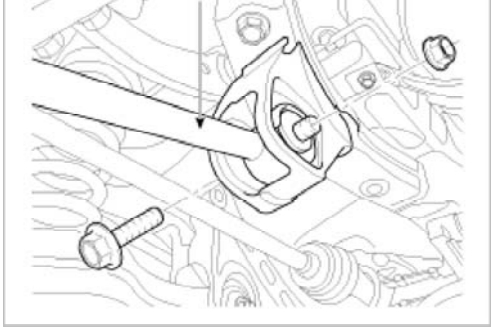

4. Installation is the reverse of removal.
5. Check the alignment.
   (Refer to 'Tires/Wheels - alingment')

Inspection

1. Check the bushing for wear and deterioration.
2. Check the rear assist arm for deformation.
3. Check ball joint for damage.
4. Check for the all bolts and nuts.

Suspension System > Rear Suspension System > Trailing Arm > Repair procedures

Replacement

1. Remove the rear wheel & tire.

Tightening torque :
88.3 ~ 107.9N.m(9.0 ~ 11.0Kgf.m, 65.1 ~ 79.6lb-ft)

CAUTION

Be careful not to damage to the hub bolts when removing the front wheel & tire.

2. Loosen the nuts & bolts and then remove the trailing arm(A) with the rear axle.

Tightening torque
Trailing arm :
34.3 ~ 53.9N.m(3.5 ~ 5.5Kgf.m, 25.3 ~ 39.8lb-ft)
Parking brake cable bracket :
6.9 ~ 10.8N.m(0.7 ~ 1.1Kgf.m, 5.1 ~ 8.0lb-ft)

[2WD]

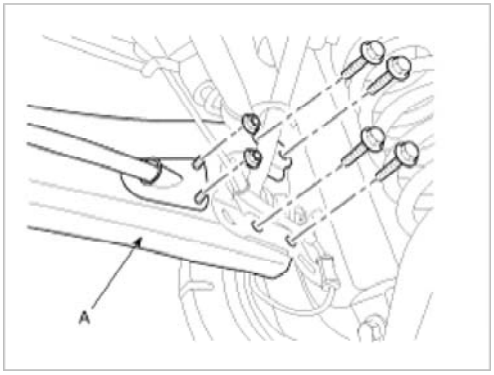

[4WD]

mcx30.com

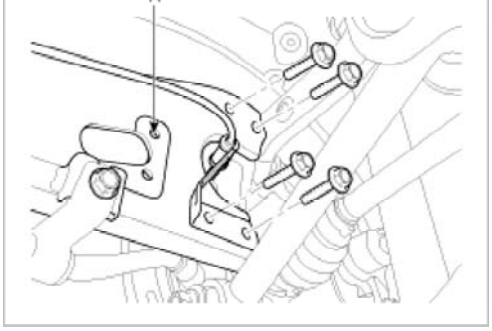

3. Loosen the parking brake cable bracket bolt(A) & height sensor bracket bolt(B).

[2WD/4WD]

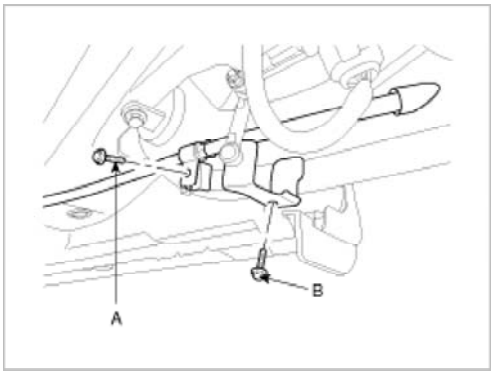

4. Loosen the mounting bolt and then remove the trailing arm(A) with the frame.

Tightening torque :
98.1 ~ 117.7N.m(10.0 ~ 12.0Kgf.m, 72.3 ~ 86.8lb-ft)

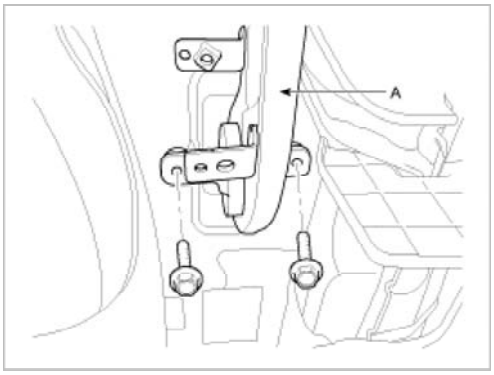

5. Installation is the reverse of removal.

Suspension System > Rear Suspension System > Rear Cross Member > Repair procedures

Replacement

1. Remove the rear wheel & tire.

Tightening torque :
88.3 ~ 107.9N.m(9.0 ~ 11.0Kgf.m, 65.1 ~ 79.6lb-ft)

CAUTION

Be careful not to damage to the hub bolts when removing the front wheel & tire.

2. Remove the parking brake cable. (Refer to BR group - 'Parking Brake')
3. Loosen the bolt and then remove the trailing arm(A).

mcx30.com

Tightening torque :
98.1 ~ 117.7N.m(10.0 ~ 12.0Kgf.m, 72.3 ~ 86.8lb-ft)

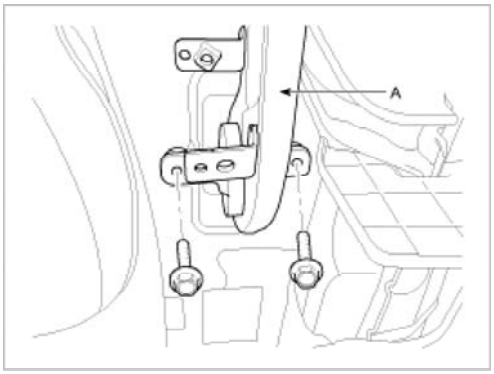

4. Loosen the shock absorber mounting bolts(A).

Tightening torque :
49.0 ~ 63.7N.m(5.0 ~ 6.5Kgf.m, 36.2 ~ 47.0lb-ft)

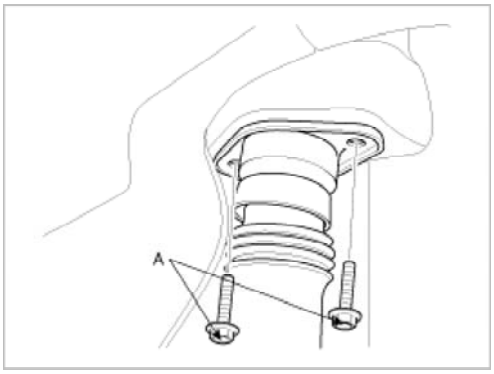

5. Remove the rear muffler.

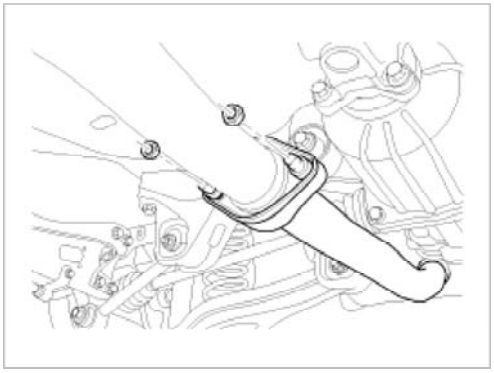

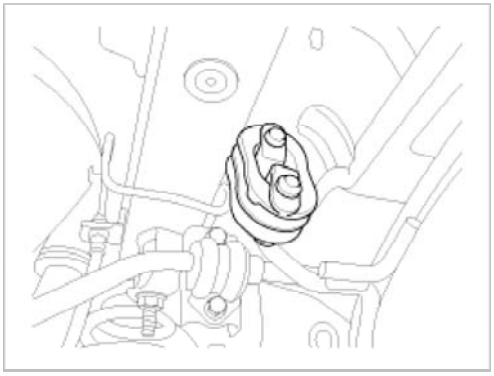

mcx30.com

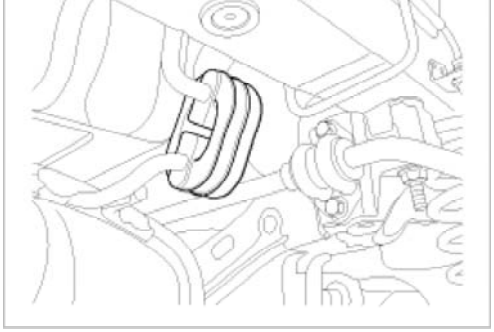

6. Loosen the bolt and then remove the propellar shaft.
7. Loosen the mounting bolts and then remove the rear cross member with the frame.

Tightening torque :
156.9 ~ 176.5N.m(16.0 ~ 18.0Kgf.m, 115.7 ~ 130.2lb-ft)

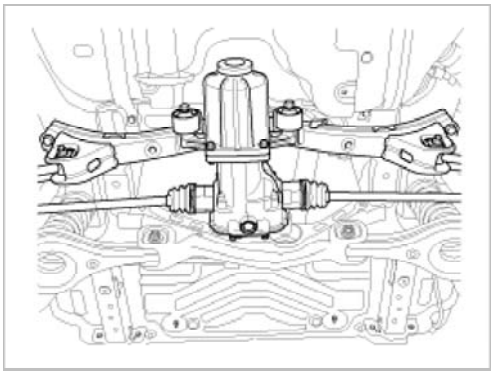

8. Remove the rear lower arm.
   (Refer to 'Rear Lower Arm')
9. Remove the rear shock absorber.
   (Refer to 'Rear Shock Absorber')
10. Remove the rear upper arm.
    (Refer to 'Rear Upper Arm')
11. Remove the trailing arm.
    (Refer to 'Trailing arm')
12. Remove the rear assist arm.
    (Refer to 'Rear Assist Arm')
13. Remove the rear driveshaft.
    (Refer to DS group - 'Rear Driveshaft Assembly')
14. Remove the differential carrier.
    (Refer to DS group - 'Differntial Carrier')
15. Installation is the reverse of removal.
16. Check the alignment.
    (Refer to 'Tires/Wheels - alingment')

Suspension System > Tires/Wheels > Tire > Repair procedures

Tire wear

1. Measure the tread depth of the tires.

Tread depth [limit] : 1.6 mm (0.063 in.)

2. If the remaining tread(A) depth is less than the limit, replace the tire.

mcx30.com

When the tread depth of the tires is less than 1.6 mm(0.063 in.), the wear indicators (B) will appear.

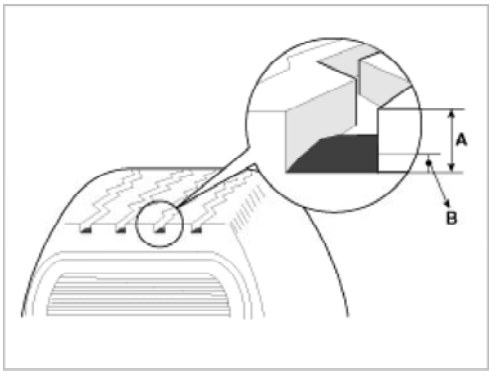

Tire Rotation

Rotate the tires in the pattern illustrated.

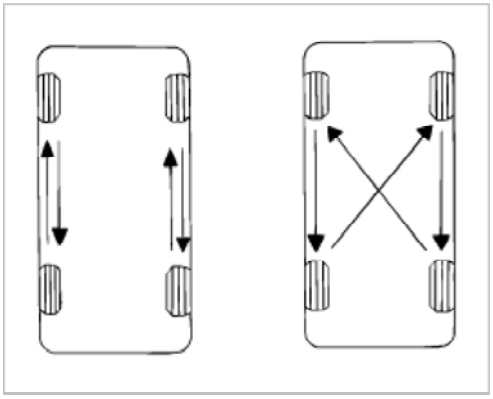

Checking For Pull and Wander

If the steering pulls to one side, rotate the tires according to the following wheel rotation procedure.

1. Rotate the front right and front left tires, and perform a road test in order to confirm vehicle stability.

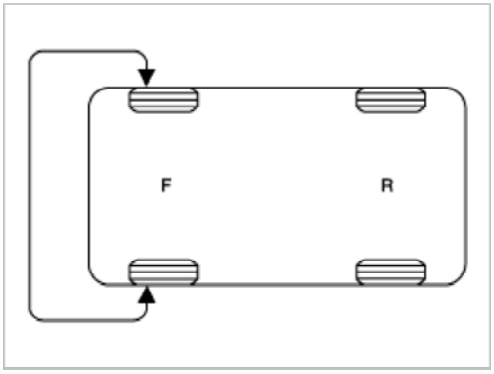

2. If the steering pulls to the opposite side, rotate the front and rear tires, and perform a road test again.

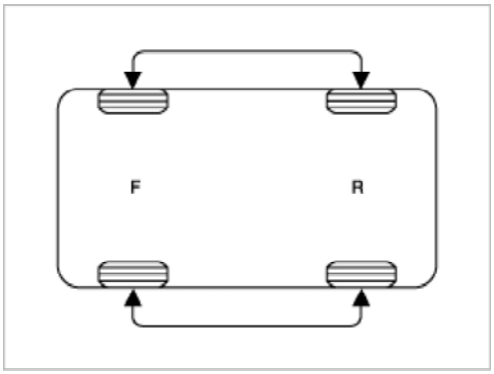

3. If the steering continues to pull to one side, rotate the front right and left tires again, and perform a road test.

mcx30.com

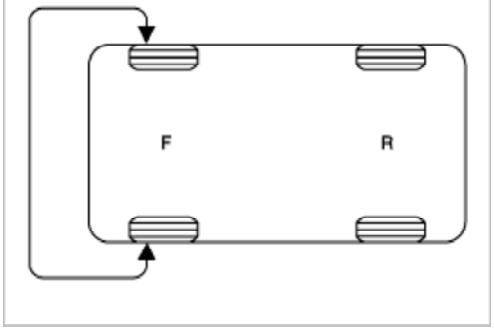

4. If the steering continues to pull to the opposite side, replace the front wheels with new ones.

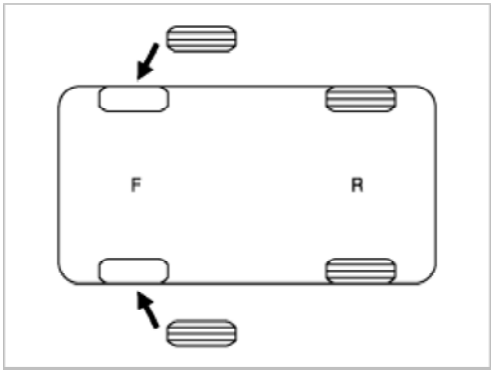

Suspension System > Tires/Wheels > Wheel > Repair procedures

Hub nut tightening sequence

Tighten the hub nuts as follows.

Tightening torque :
88.3 ~ 107.9N.m(9.0 ~ 11.0kgf.m, 65.1 ~ 79.6lb-ft)

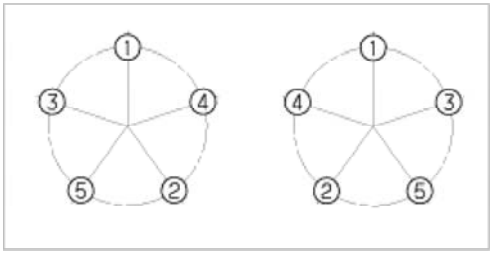

CAUTION

When using an impact gun, final tightening torque should be checked using a torque wrench.

Run out inspection

1. Jack up the vehicle.
2. Measure the wheel Run-out by using a dial indicator as illustration below.

Run-out	Aluminum	Steel
Radial mm(in.)	Below 0.3(0.012)	Below 1.0(0.039)
Axial mm(in.)	Below 0.3(0.012)	Below 0.6(0.024)

3. If measured value exceeds the standard value, replace the wheel.

mcx30.com

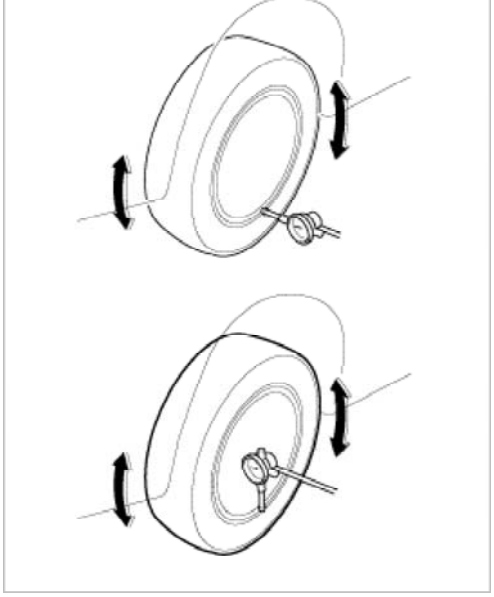

Suspension System > Tires/Wheels > Alignment > Repair procedures

Front Wheel Alignment

CAUTION

When using a commercially available computerized wheel alignment equipment to inspect the front wheel alignment, always position the vehicle on a level surface with the front wheels facing straight ahead.
Prior to inspection, make sure that the front suspension and steering system are in normal operating condition and that the tires are inflated to the specified pressure.

Toe

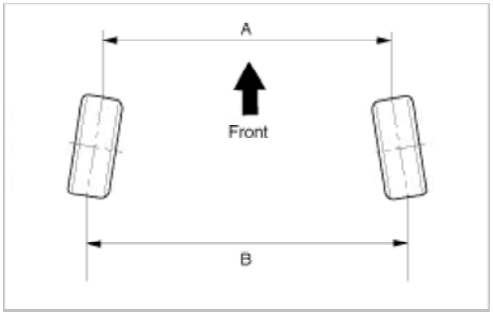

B - A > 0: Toe in (+)
B - A < 0: Toe out (-)

Toe adjustment

1. Loosen the tie rod end lock nut.
2. Remove the bellows clip to prevent the bellows from being twisted.
3. Adjust the toe by screwing or unscrewing the tie rod. Toe adjustment should be made by turning the right and left tie rods by the same amount.

Toe
Total : 0°±0.2°
Individual : 0°±0.1°

Tie rod	Turning direction	Toe
		Decrease

mcx30.com

LH (Driver's side)		
	Forward	Increase (Toe out)
RH	Reward	Increase (Toe out)
	Forward	Decrease (Toe in)

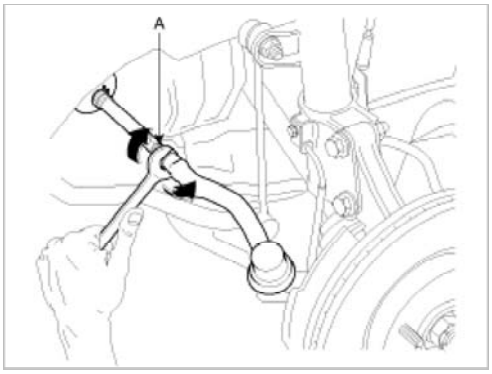

4. When completing the toe adjustment, install the bellows clip and tighten the tie rod end lock nut to specified torque.

Tightening torque :
49.0 ~ 53.9N.m(5.0 ~ 5.5Kgf.m, 36.2 ~ 39.8lb-ft)

Camber and Caster

Camber and Caster are pre-set at the factory, so they do not need to be adjusted. If the camber and caster are not within the standard value, replace or repair the damaged parts and then inspect again.

Camber angle : -0.5°±0.5°

Caster angle : 4.02 ° ± 0.5°

Rear Wheel Alignment

CAUTION

When using a commercially available computerized wheel alignment equipment to inspect the rear wheel alignment, always position the vehicle on a level surface.
Prior to inspection, make sure that the rear suspension system is in normal operating condition and that the tires are inflated to the specified pressure.

Toe

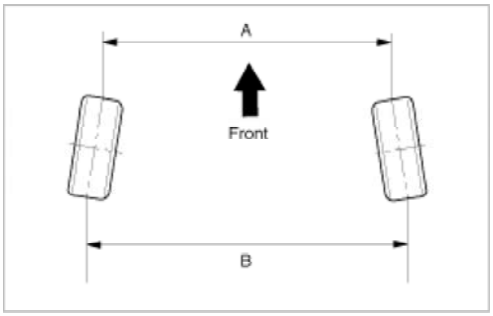

B - A > 0: Toe in (+)
B - A < 0: Toe out (-)

Toe adjustment

mcx30.com

2. Adjust rear toe by turning the rear assist arm cam bolt (A) clockwise or counter clockwise. Toe adjustment should be made by turning the right and left cam bolt by the same amount.

Toe
Total : 0.2°±0.2°
Individual : 0.1°±0.1°

Cam bolt	Turning direction	Toe
LH (Driver's side)	Clockwise	Decrease (Toe in)
	Counter clockwise	Increase (Toe out)
RH	Clockwise	Increase (Toe out)
	Counter clockwise	Decrease (Toe in)

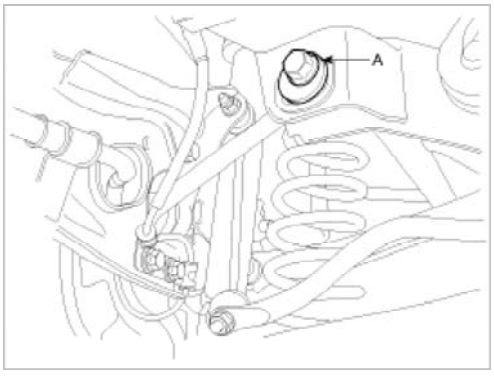

3. When completing the toe adjustment, tighten the nut to specified torque.

Tightening torque :
137.3 ~ 156.9N.m(14.0 ~ 16.0Kgf.m, 101.3 ~ 115.7lb-ft)

Camber

Camber is pre-set at the factory, so it does not need to be adjusted. If the camber is not within the standard value, replace or repair the damaged parts and then inspect again.

Camber: -1.0°±0.5°

Suspension System > Tire Pressure Monitoring System > Components and Components Location

Components

mcx30.com

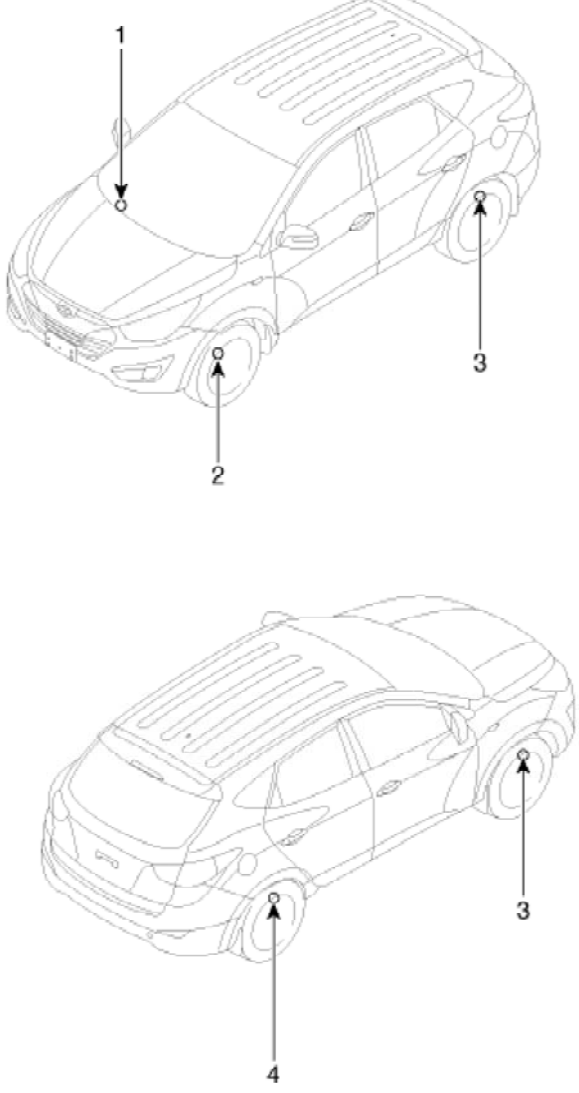

1. Receiver 2. TPMS Sensor 3. TPMS Sensor	4. TPMS Sensor 5. TPMS Sensor

Suspension System > Tire Pressure Monitoring System > Description and Operation

Description

TREAD Lamp

- Tire Under Inflation / Leak Warning.

1. Turn on condition
   A. When tire pressure is below allowed threshold
   B. When rapid leak is detected by the sensor.
   C. Indicates that tire needs to be re-inflated to placard pressure / repaired.
2. Turn off condition
   A. Under-inflation ; When tire pressure is above (warning threshold + hysteresis).
   B. Rapid Leak ; When tire pressure is above (leak warning threshold).

DTC Warning

mcx30.com

A. When the system detects a fault that is external to the receiver/ sensor.
B. When the system detects a receiver fault.
C. When the system detects a sensor fault.

2. Turn off condition
   A. If the fault is considered as 'critical', then the lamp is held on throughout the current Ignition cycle (even if the DTC has been demoted). This is because it is important to bring the problem to the drivers attention. On the following Ignition cycle, the demotion conditions will be re-checked. If the demotion conditions occur, the lamp will be turned off. It will be held on until DTC demotion checking is completed.
   B. 'Non critical' faults are those that can occur temporarily e.g. vehicle battery under voltage. The lamp is therefore turned off when the DTC demotion condition occurs.

System Fault

1. General Function
   A. The system monitors a number of inputs across time in order to determine that a fault exists.
   B. Faults are prioritized according to which has the most likely cause.
   C. Maximum fault store is equal to 15.
   D. Certain faults are not covered through DTC. The main ones are:
      1) Sensor thermal shutdown (over 257°F/125°C).
      2) Ignition Line stuck ; requires observation of lamps at Ignition ON to diagnose.

Suspension System > Tire Pressure Monitoring System > TPMS Sensor > Description and Operation

Description

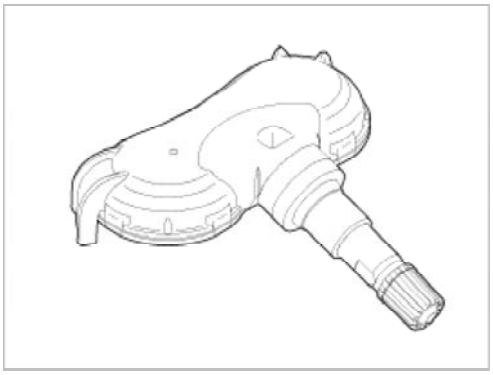

1. Mode
   (1) Configuration State
      A. All sensors should be in the Low Line (Base) state.
      B. In Low Line (Base) configuration, sensor transmissions occur every 3 minutes 20 seconds (nominal) and pressure is measured every 20 seconds.

   (2) Normal Fixed Base State
      A. Sensor transmissions continue at the Low Line (Base) configuration defined rates until the state is either changed by LF command or by the sensor detecting a condition that requires a temporary change to another state.
      B. The LF command to this state must contain the sensors ID.

   (3) Storage Auto State:
      A. This state is a Low current consumption state.
      B. Sensors are in this state when they first arrive at the dealership (either on the vehicle or as replacement spares).
      C. In this state, the sensor does not measure pressure / temperature / battery level.
      D. The sensor will not transmit in this state unless requested to do so by the initiate command.

   (4) Alert State:
      A. The sensor automatically enters this state if the measured temperature exceeds 230 °F(110 °C) and over temperature shutdown is likely.
      B. In this state, pressure is measured every 4 seconds and RF data transmitted every 4 seconds.
      C. The state lasts for 1 minute if it is pressure triggered.
      D. This state is alse entered when a 3 psi change in pressure from the last RF transmission occurs.

mcx30.com

NOTE

Sensor mode is used to configure sensor between high line and low line system. TPM sensor for LM should be set to low line.

Suspension System > Tire Pressure Monitoring System > TPMS Sensor > Repair procedures

Removal

Tire Removal

1. Deflate tire & remove balance weights.

NOTE

Sensor can be unscrewed before unseating the tire bead.

CAUTION

- The tire bead should be broken approx. 90° from the valve side of the wheel. The bead breaker should not be set too deep.
- Avoid tire/tool contact with the valve on dismount.
- Dismount should end near the valve.

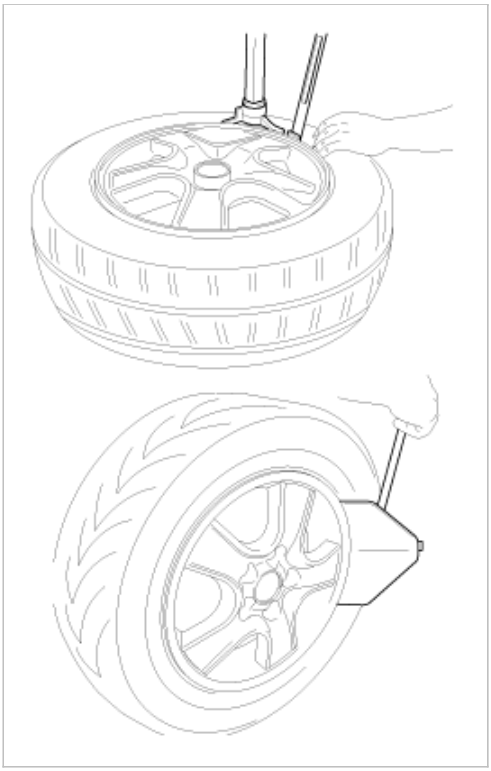

Sensor Removal

CAUTION

Handle the sensor with care.

1. Remove the valve nut.

mcx30.com

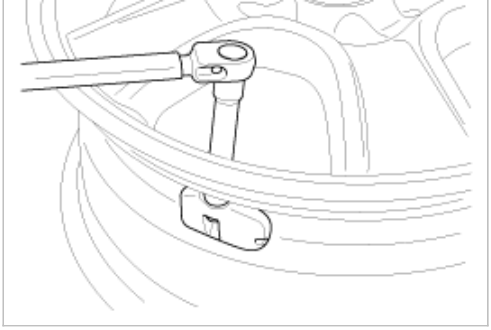

CAUTION

The valve nut should not be re-used.

2. Discard the valve assembly.

Installation

Sensor Fit

CAUTION

- Handle the sensor with care.
- Avoid lubricant contact.
- Ensure that the wheel to be fitted is designed for sensor mount. There should normally be a mark to indicate this.
- Ensure that the valve hole and mating face of the wheel are clean.

1. Slide the sensor-valve unit through the valve hole of the rim. Hold the sensor against the rim and the rubber grommet against the sealing surface.
2. Insert the nut over the valve stem and then tighten the nut.

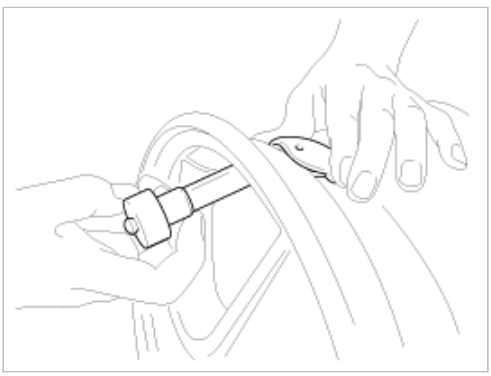

3. Continue to tightening the nut until contact with the rim and then tighten to 3.5 ~ 4.5Nm.

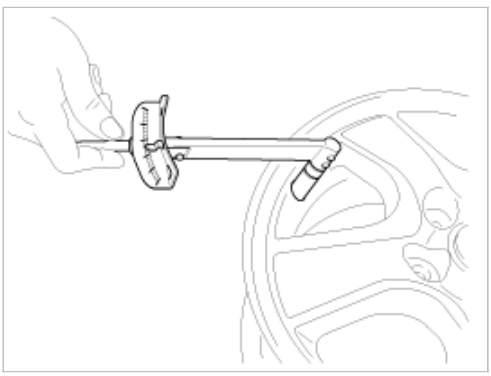

CAUTION

- Tighten slowly with quarter turn steps until the final torque is reached.

mcx30.com

- Do not use electric or pneumatic tools.

4. Check that the sensor is firmly attached to the rim.

> **CAUTION**
>
> Risk of damage during the tire installation/ removal if the sensor is not firmly attached to the rim.

5. Carry out inflation / pressure correction and then fit valve cap.

> **CAUTION**
>
> Change the newly installed sensor mode to Normal Fixed Base(Low Line) with the 'GDS'.
> Mode (Status / option) of the sensor installed to the vehicle should be Normal Fixed Base (Low).

Sensor ID Writing (Wireless)

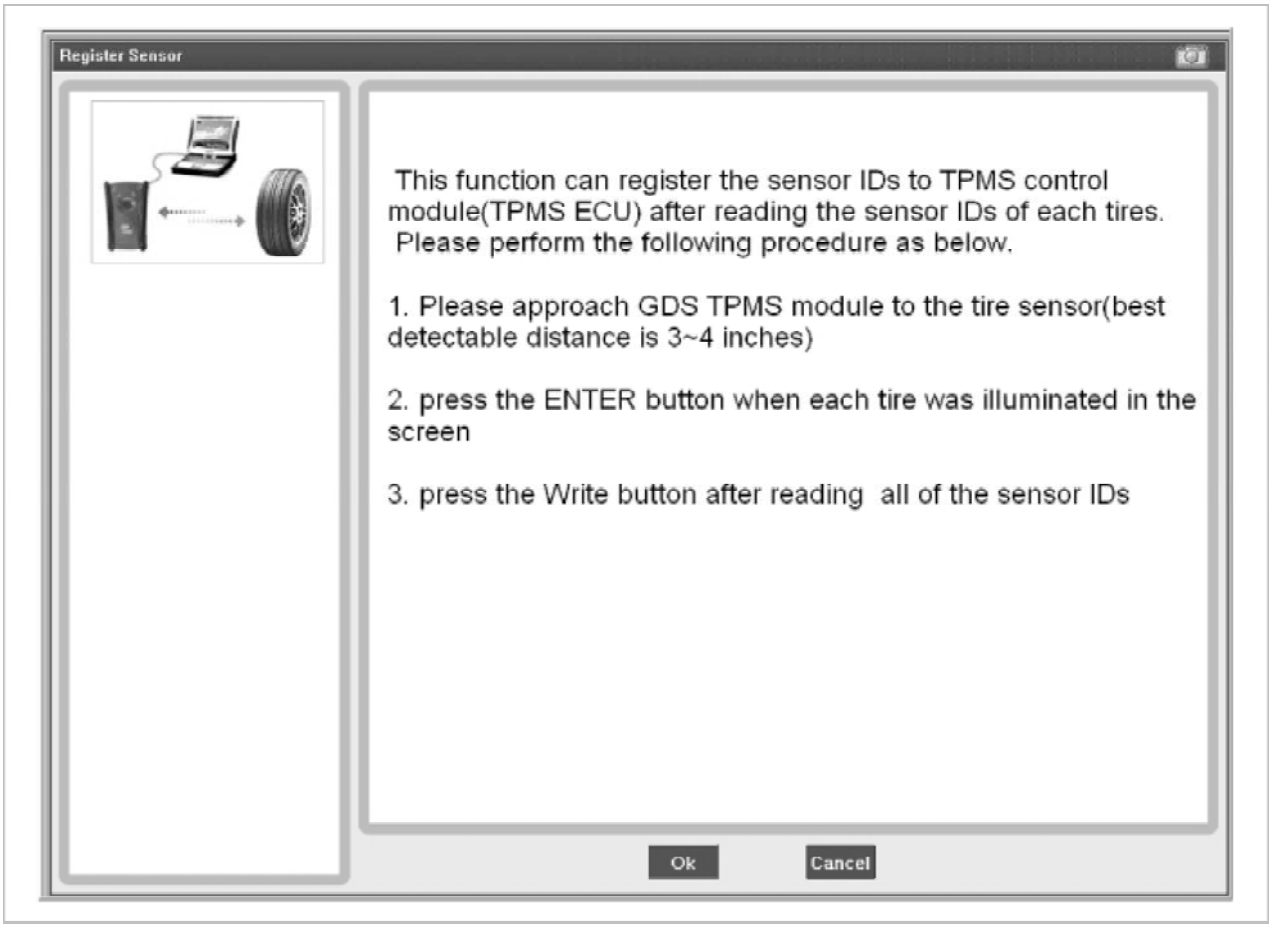

mcx30.com

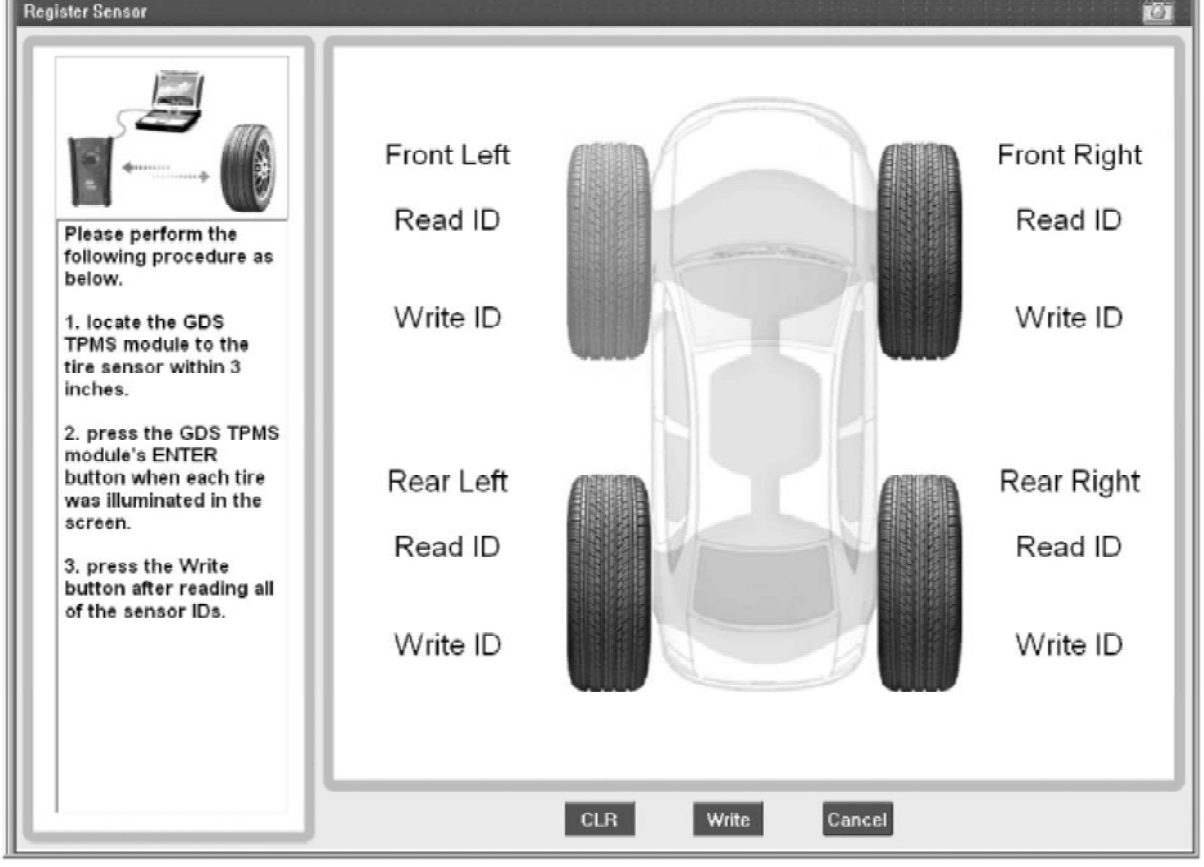
Register Sensor
Please perform the following procedure as below.
1. locate the GDS TPMS module to the tire sensor within 3 inches.
2. press the GDS TPMS module's ENTER button when each tire was illuminated in the screen.
3. press the Write button after reading all of the sensor IDs.
Front Left
Read ID
Write ID
Front Right
Read ID
Write ID
Rear Left
Read ID
Write ID
Rear Right
Read ID
Write ID
CLR
Write
Cancel

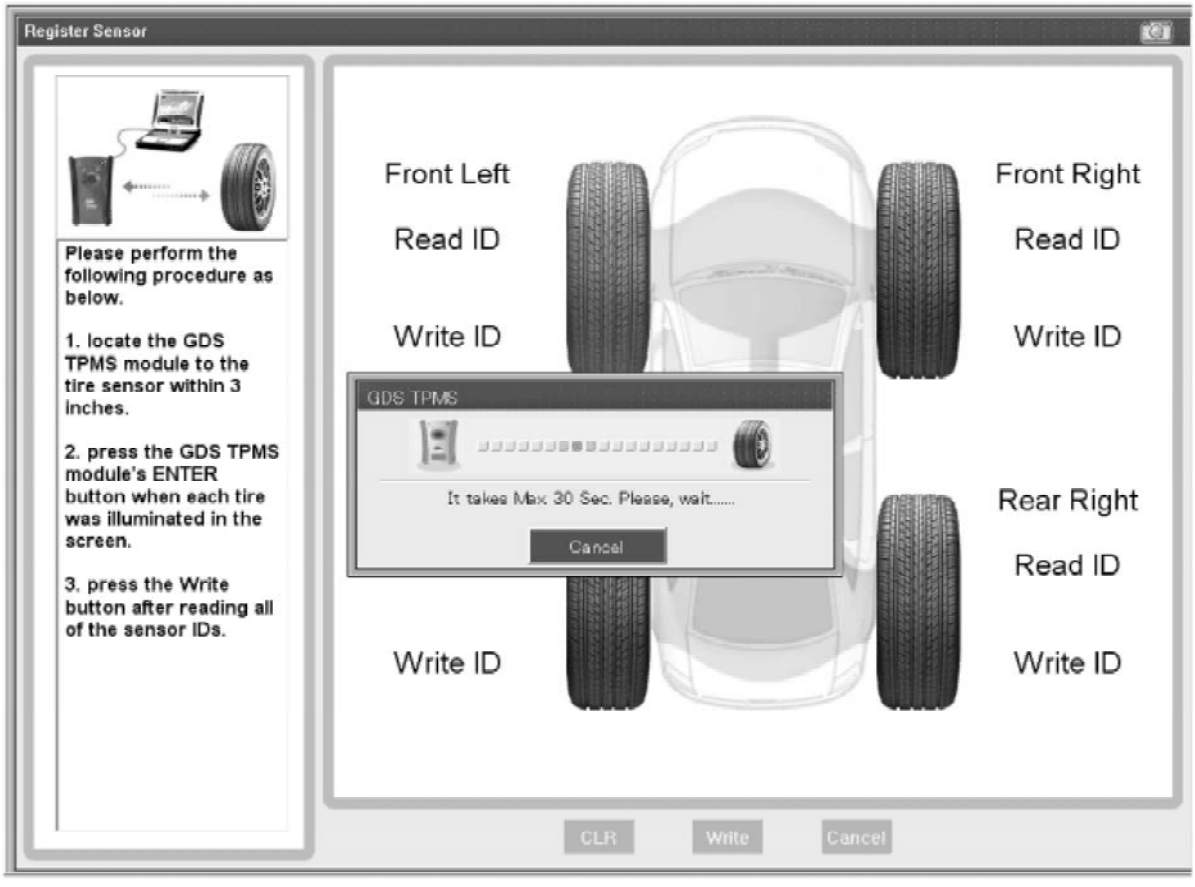
Register Sensor
Please perform the following procedure as below.
1. locate the GDS TPMS module to the tire sensor within 3 inches.
2. press the GDS TPMS module's ENTER button when each tire was illuminated in the screen.
3. press the Write button after reading all of the sensor IDs.
Front Left
Read ID
Write ID
Front Right
Read ID
Write ID
GDS TPMS
It takes Max 30 Sec. Please, wait.....
Cancel
Rear Right
Read ID
Write ID
Write ID
CLR
Write
Cancel

mcx30.com

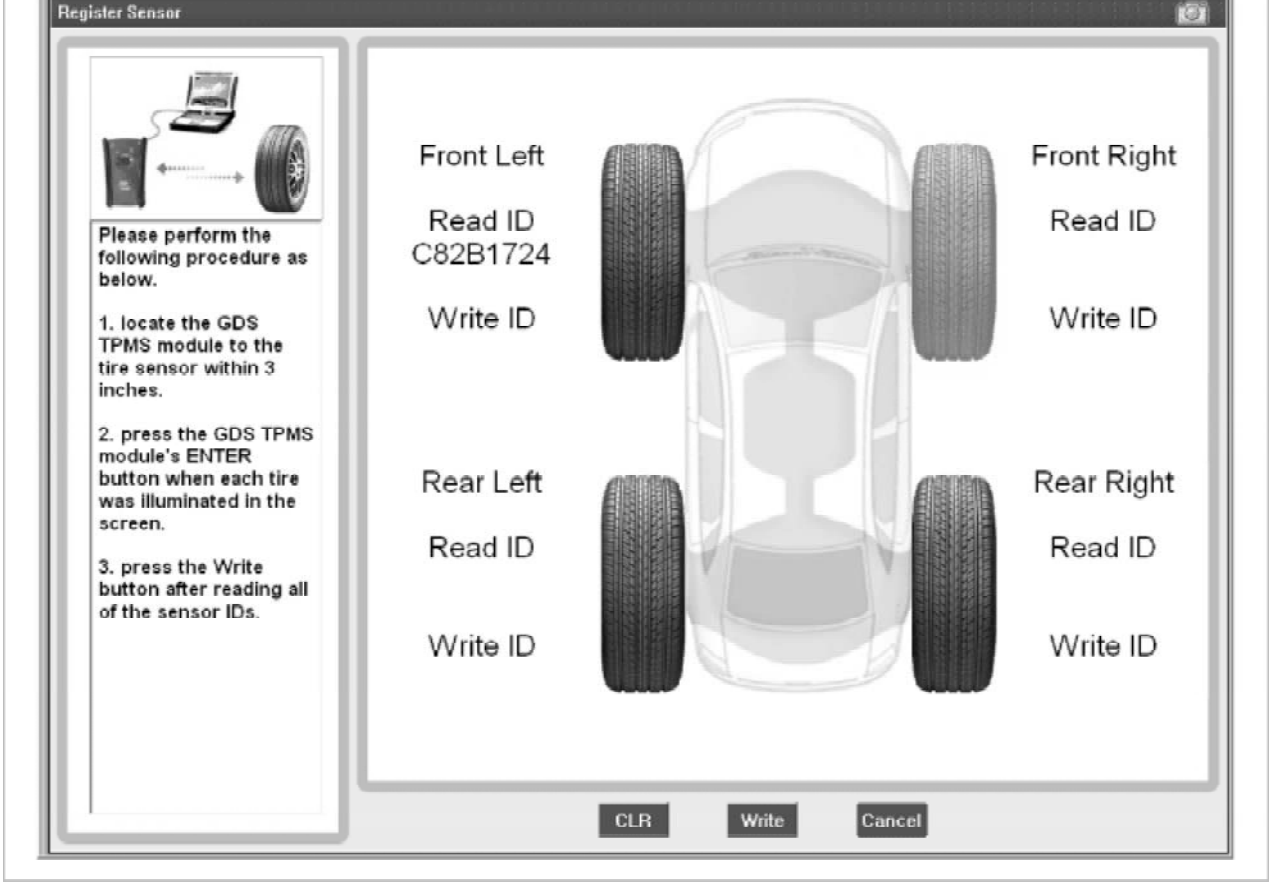

Sensor ID Writing

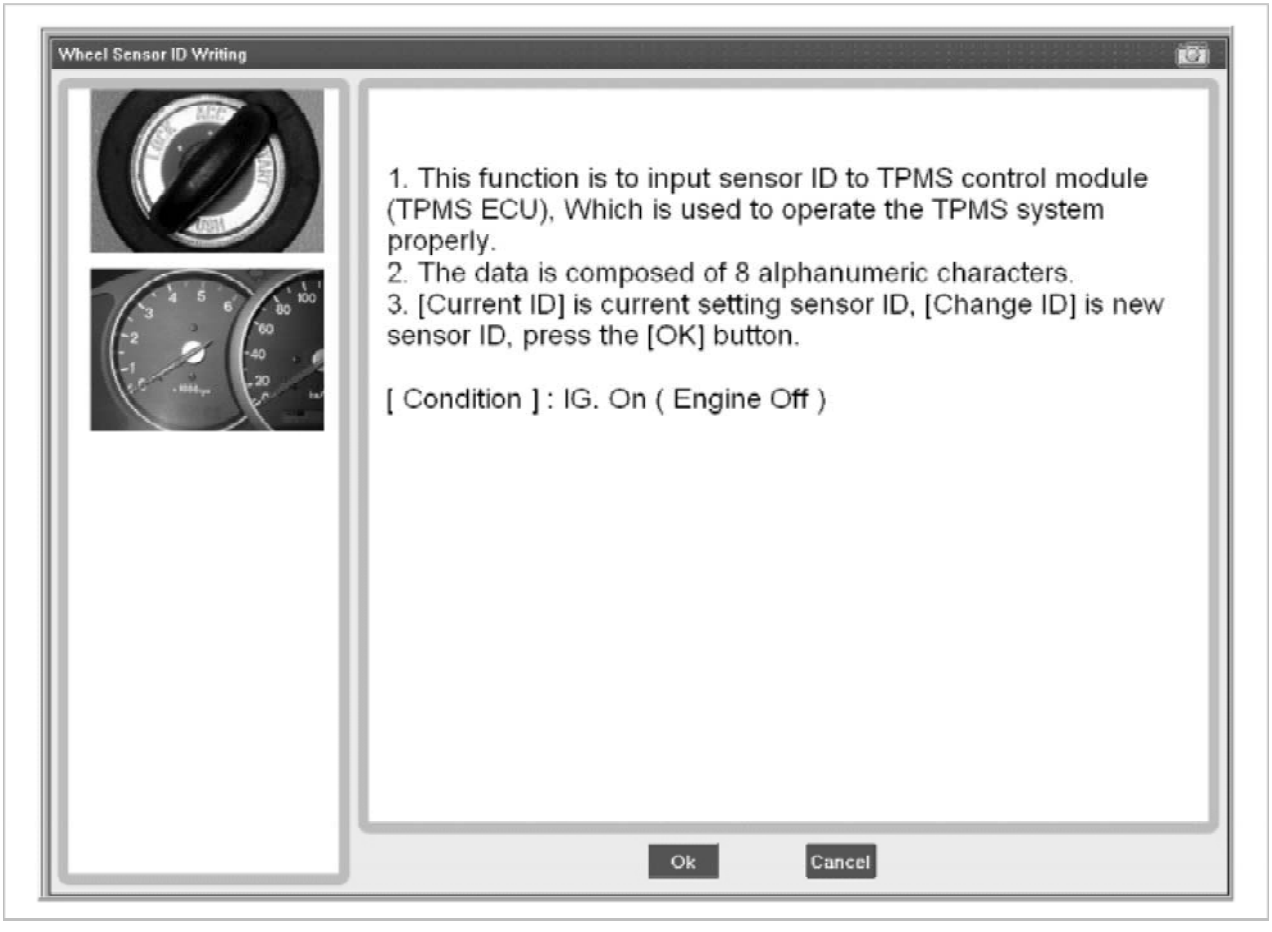

mcx30.com

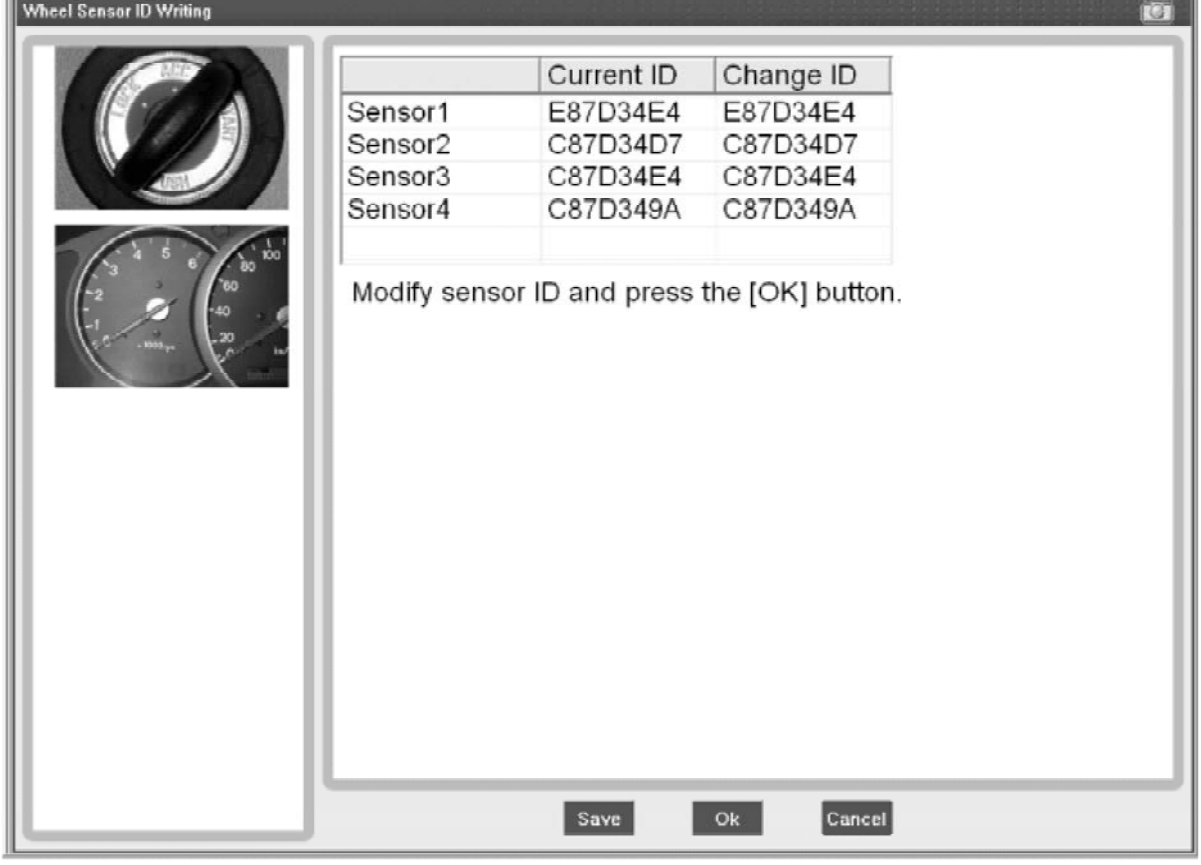

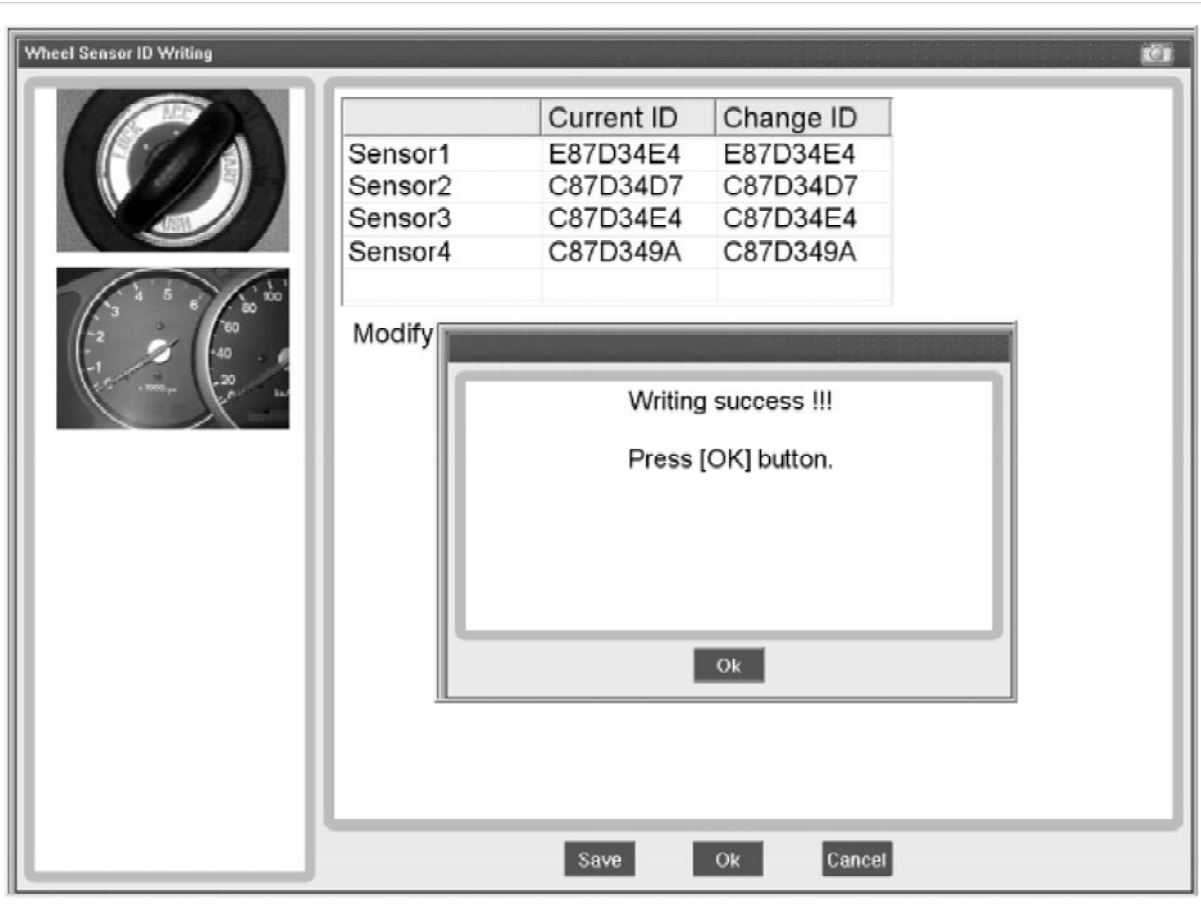

mcx30.com

Suspension System > Tire Pressure Monitoring System > TPMS Receiver > Description and

Description

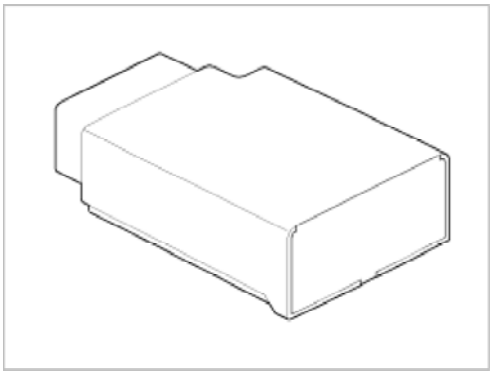

1. **Mode**
   (1) Virgin State
      A. The receiver as a sole part is shipped in this state. Replacement parts should therefore arrive in this state.
      B. In this state, there is no sensor monitoring and no DTC monitoring.
      C. The state indicates that platform specific parameters must be written to the receiver and that sensors are un-learned.

   (2) Normal State
      A. In order for tire inflation state and DTC monitoring to occur, the receiver must be in this state.
      B. In this state, automatic sensor learning is enabled.

   (3) Test State
      A. This state is only used in manufacturing plant to check RF transmission between sensor and receiver.

2. **Overview**
   A. Receives RF data from sensor.
   B. Uses sensor data to decide whether to turn on TREAD Lamp.
   C. Learn TPM sensor for under inflation monitoring automatically.
   D. Uses sensor information, distance travelled, background noise levels, Auto-learn status, short / open circuit output status, vehicle battery level, internal receiver states to determine if there is a system or a vehicle fault.

Operation

1. General Function
   A. Auto-learn takes place only once per Ignition cycle.
   B. On successful completion, 4 road wheel sensor ID's are latched into memory for monitoring.
   C. Until Auto-learn completes, previously learned sensors are monitored for under inflation / leak warnings.
2. General Conditions to Learn New Sensors:
   A. Receiver must determine that it is confident that sensor is not temporary:
      1) Uses vehicle speed.
      2) Uses confidence reduction of previously learned sensors.
   B. Typical time at driving continuously over 12.4 mph(20 kph) to learn a new sensor is up to 20 minutes.
3. General Conditions to Un-Learn a sensor that is removed:
   A. It takes less than 20 minutes at 12.4 ~ 18.6 mph(20 ~ 30kph).
   B. Confidence reduction is dependent on time which vehicle is driven at speed greater than or equal to 12.4 mph(20 kph).

Suspension System > Tire Pressure Monitoring System > TPMS Receiver > Repair procedures

Replacement

NOTE

When the receiver first arrives for replacement:
1) It will be in Virgin State.

mcx30.com

3) It will not have any sensor ID's memorized.

CAUTION

It is important to make sure that the correct receiver is used to replace the faulty part i.e. it must be Low Line and not High Line in order to have the correct inflation warning thresholds set.

1. Disconnect vehicle battery.
2. Remove the glove box.
   (Refer to BD group - "Crash Pad")
3. Remove faulty part and fit bracket assembly to new part.

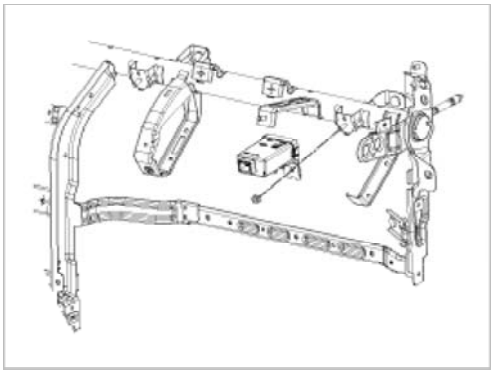

4. Secure new part to vehicle and fit connector.
5. Re-connect battery and turn Ignition on.
6. Check that TREAD Lamp flash rate matches Virgin State indication.

Vechicle Name Writing

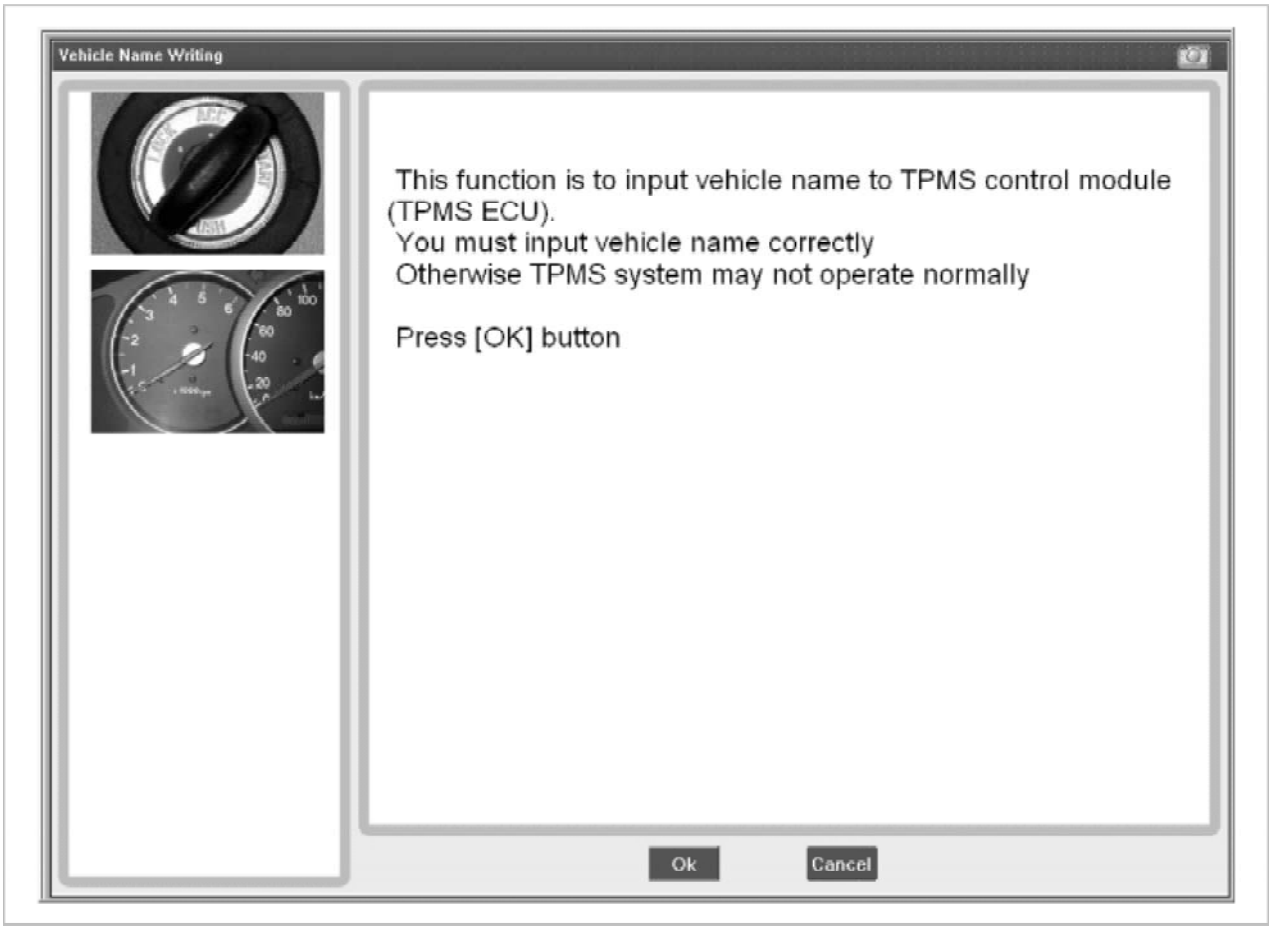

mcx30.com

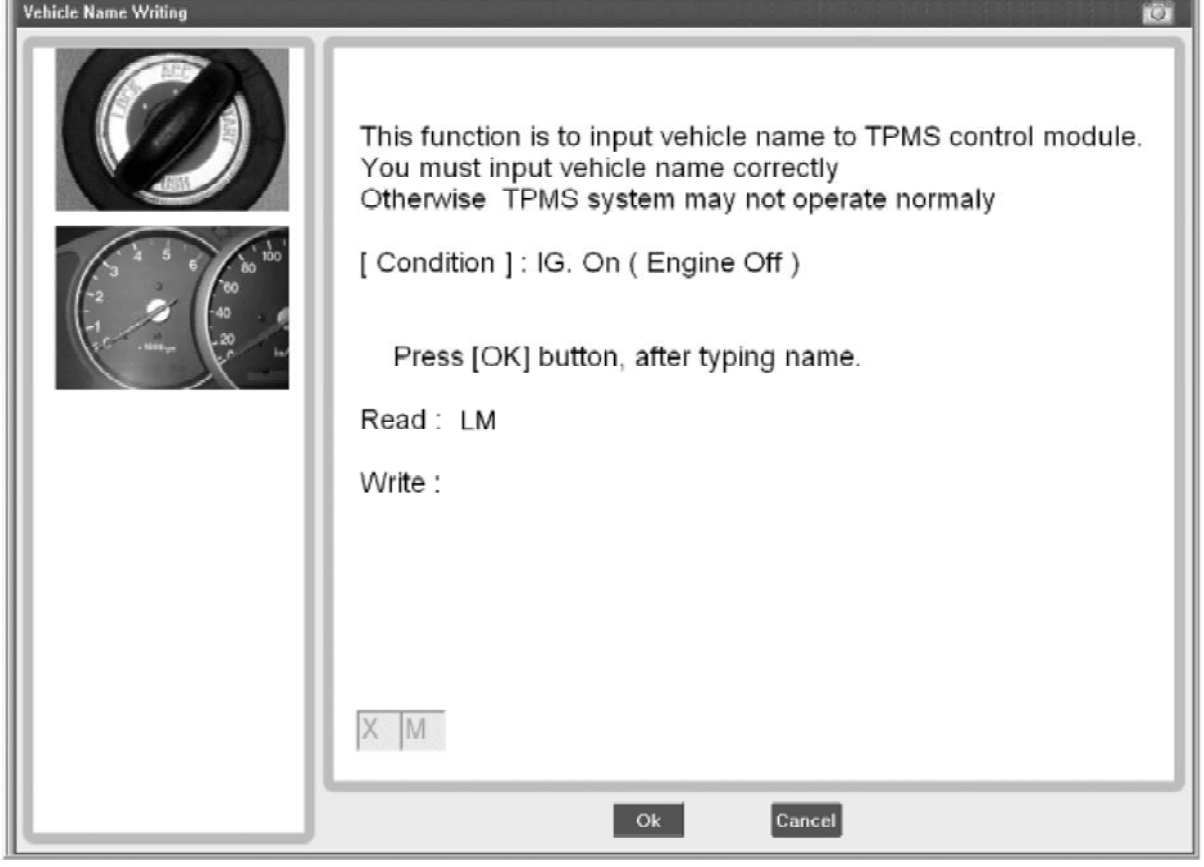
Vehicle Name Writing
This function is to input vehicle name to TPMS control module.
You must input vehicle name correctly
Otherwise TPMS system may not operate normaly
[Condition] : IG. On (Engine Off)
Press [OK] button, after typing name.
Read : LM
Write :
X M
Ok
Cancel

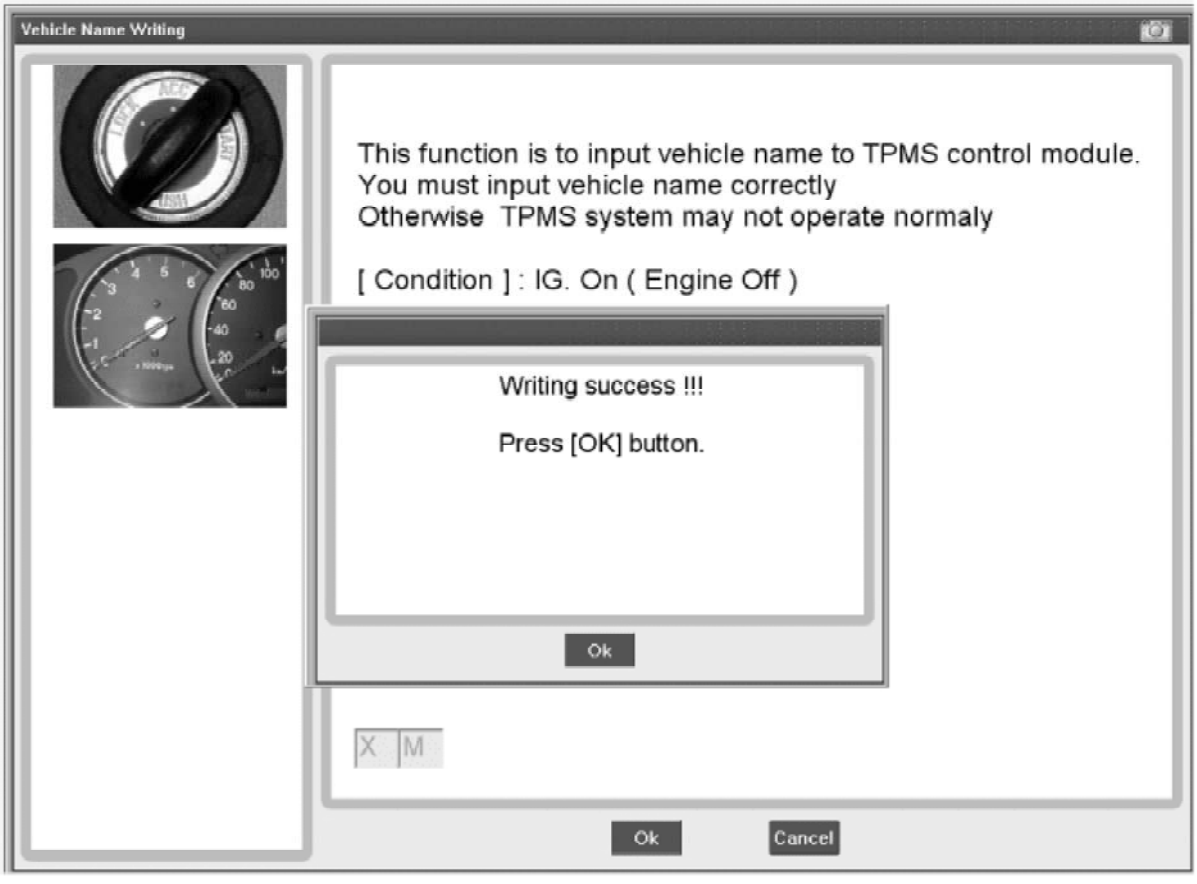
Vehicle Name Writing
This function is to input vehicle name to TPMS control module.
You must input vehicle name correctly
Otherwise TPMS system may not operate normaly
[Condition] : IG. On (Engine Off)
Writing success !!!
Press [OK] button.
Ok
X M
Ok
Cancel

mcx30.com

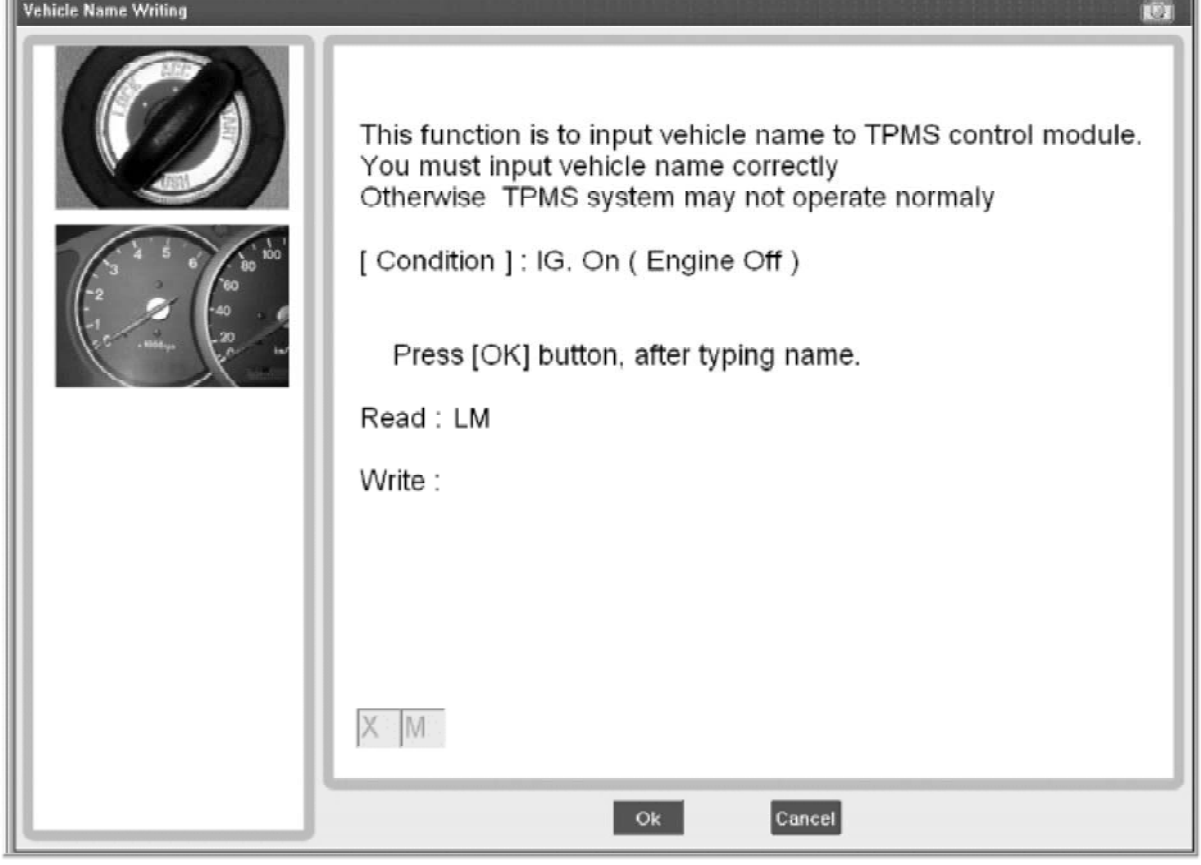

VIN Writing

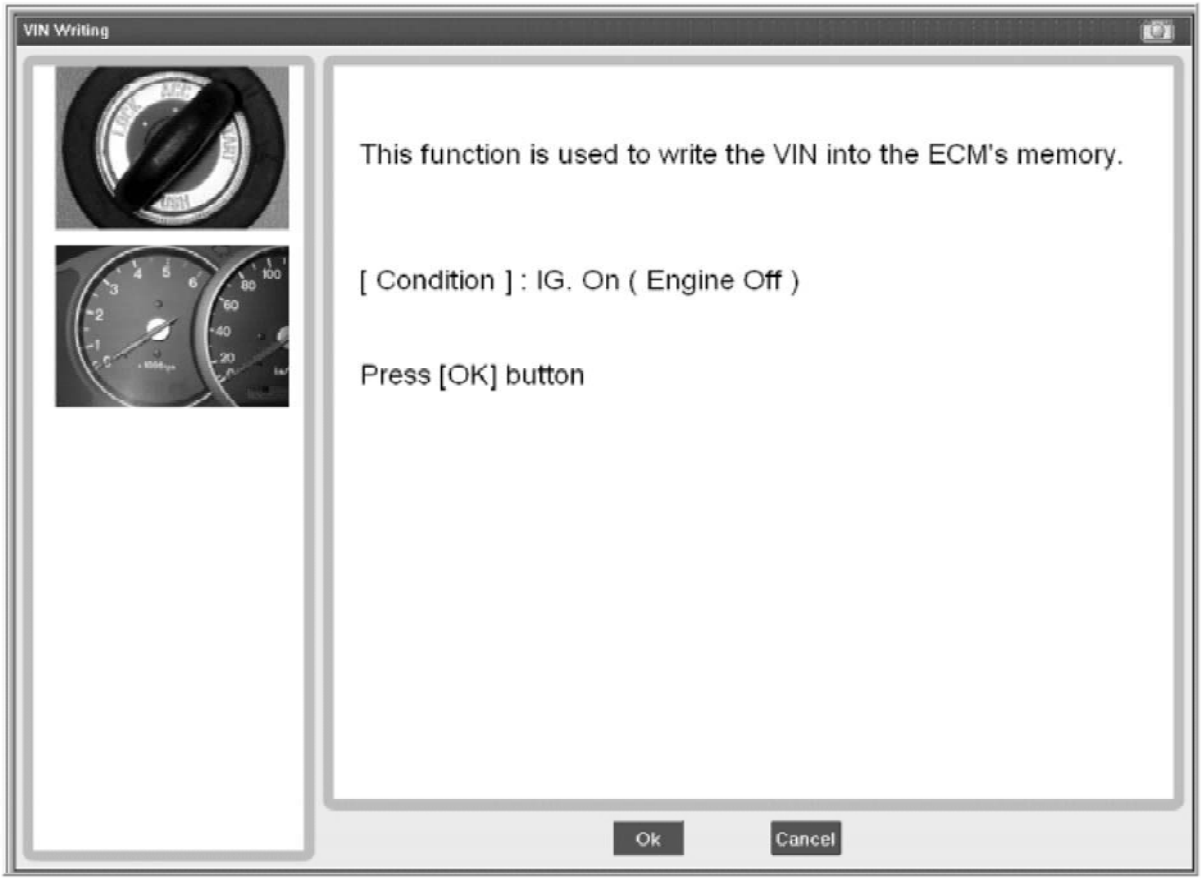

mcx30.com

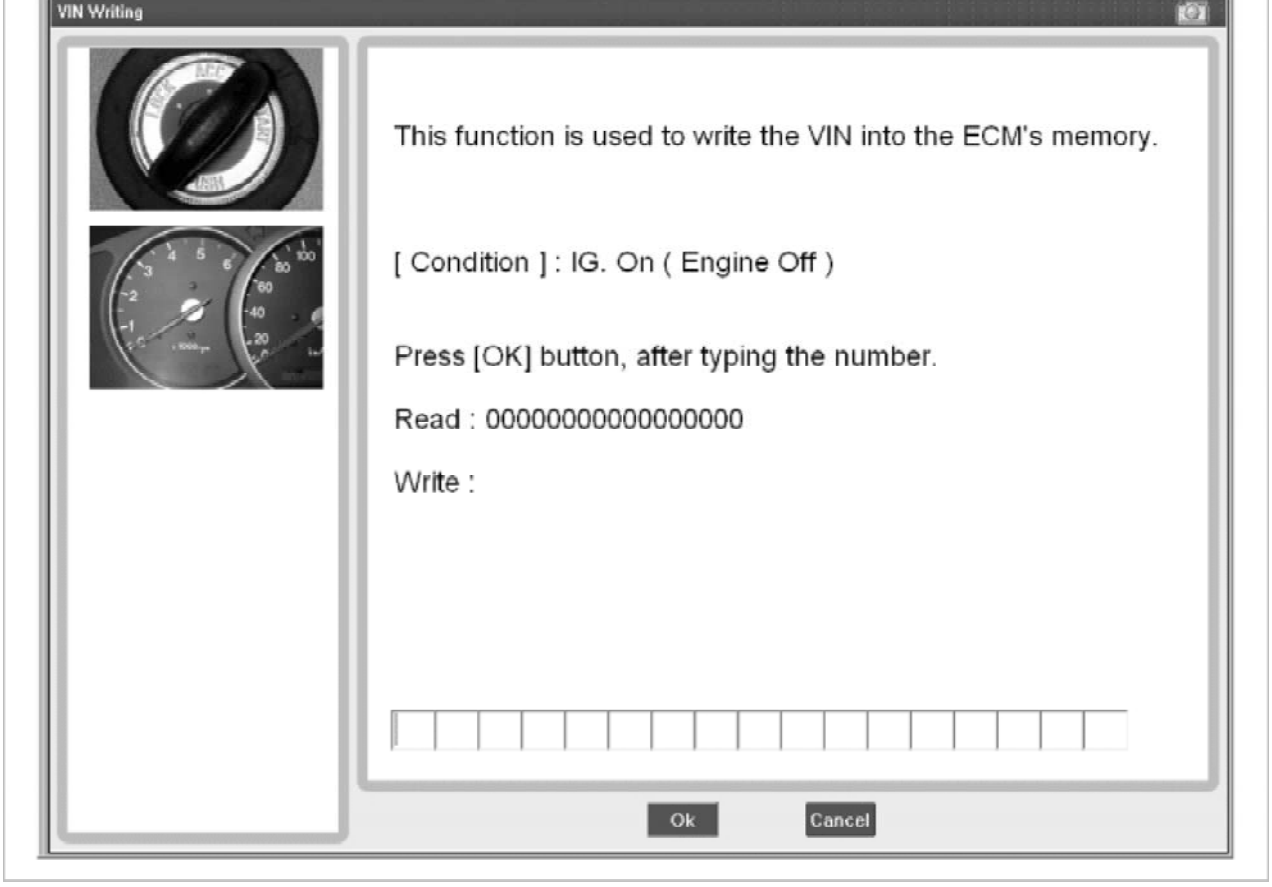
VIN Writing
This function is used to write the VIN into the ECM's memory.
[Condition] : IG. On (Engine Off)
Press [OK] button, after typing the number.
Read : 00000000000000000
Write :
Ok
Cancel

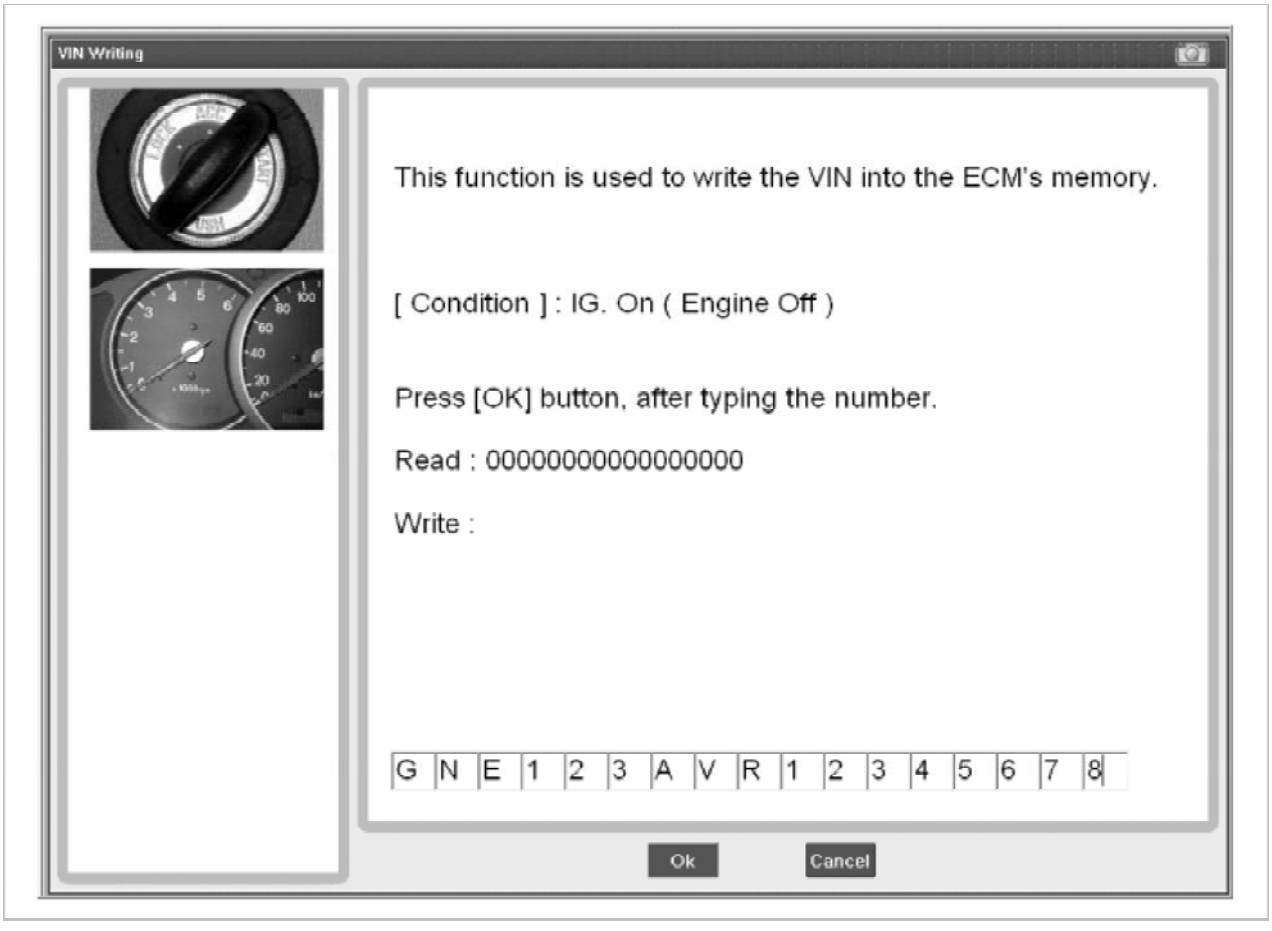
VIN Writing
This function is used to write the VIN into the ECM's memory.
[Condition] : IG. On (Engine Off)
Press [OK] button, after typing the number.
Read : 00000000000000000
Write :
G N E 1 2 3 A V R 1 2 3 4 5 6 7 8
Ok
Cancel

mcx30.com

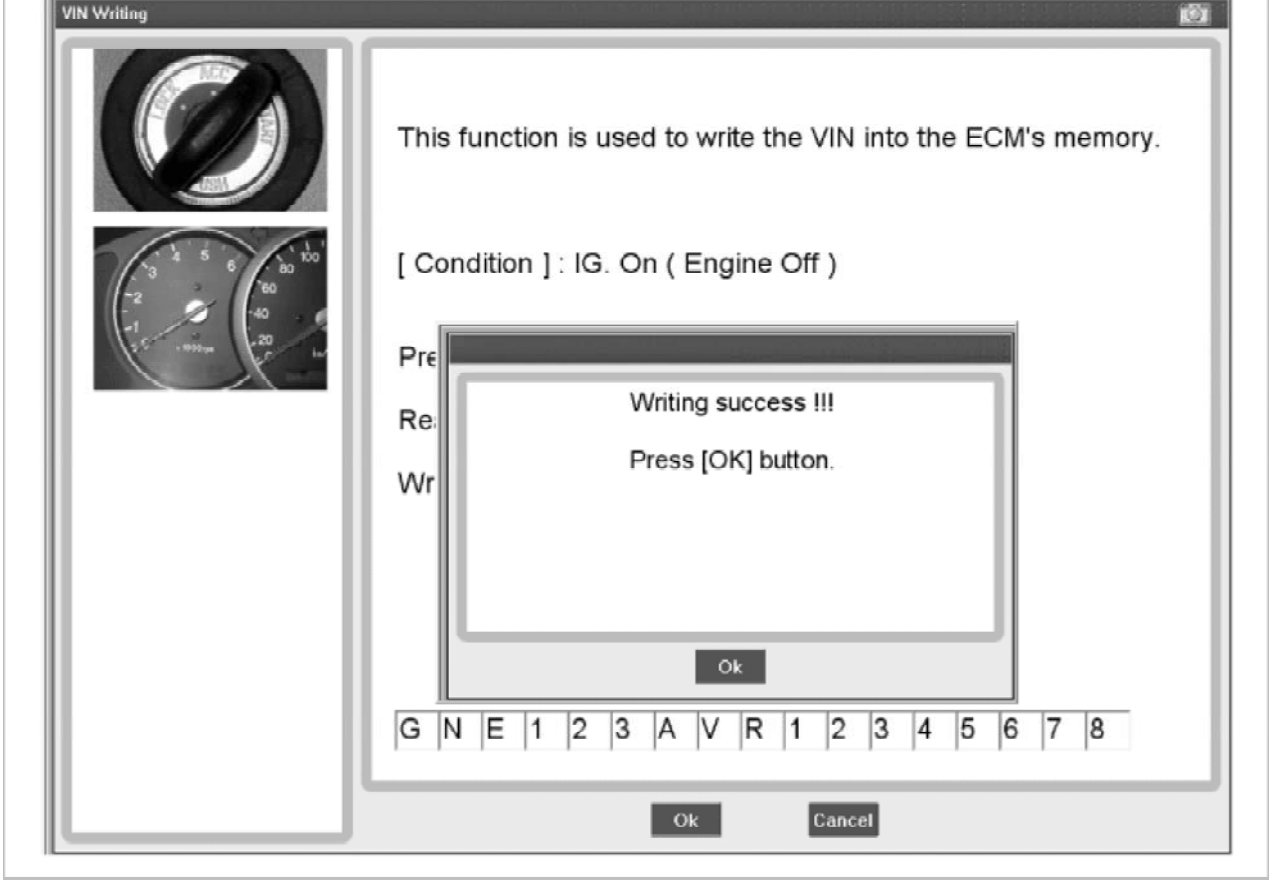
VIN Writing
This function is used to write the VIN into the ECM's memory.
[Condition] : IG. On (Engine Off)
Writing success !!!
Press [OK] button.
Ok
G N E 1 2 3 A V R 1 2 3 4 5 6 7 8
Ok
Cancel

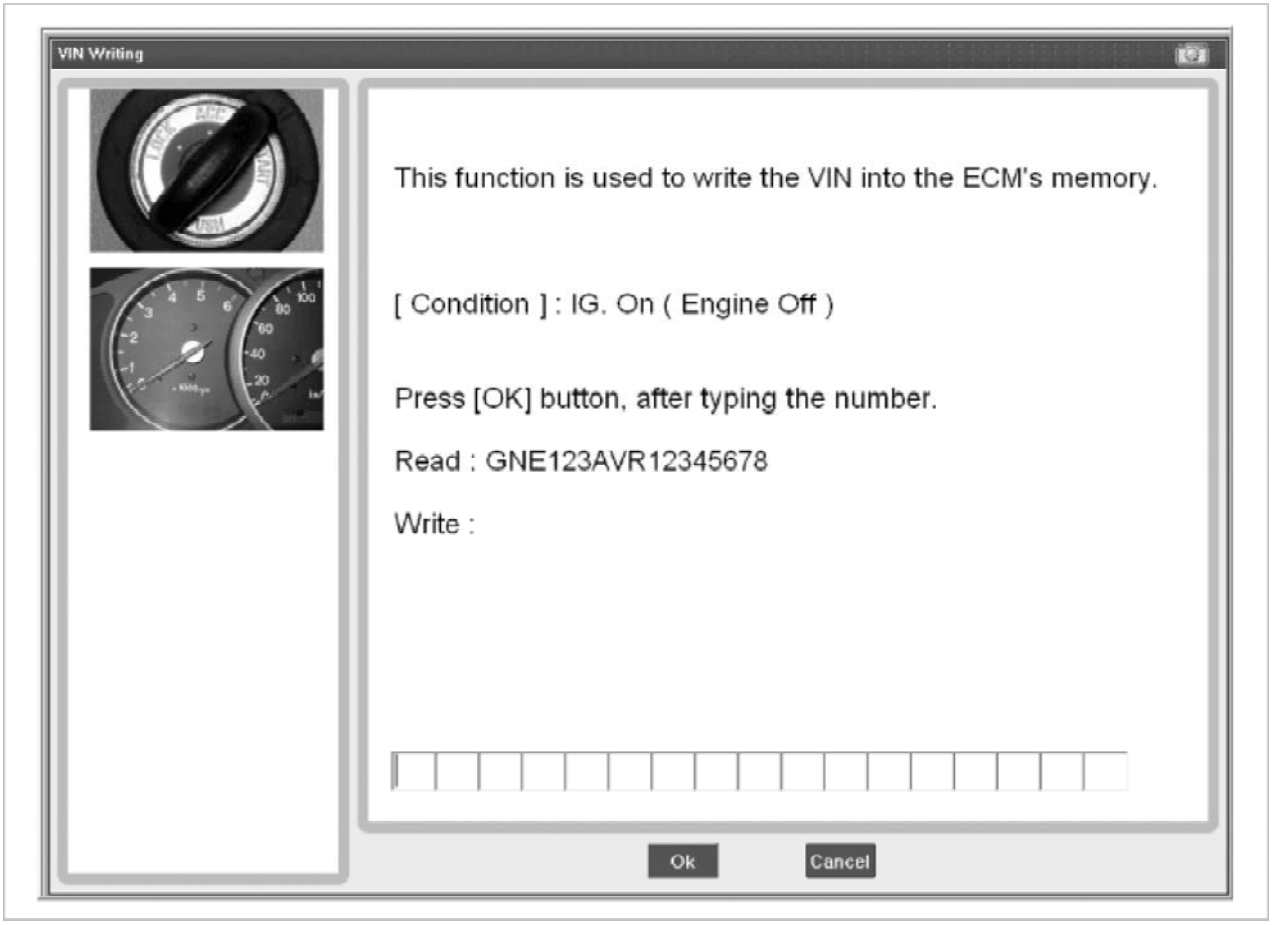
VIN Writing
This function is used to write the VIN into the ECM's memory.
[Condition] : IG. On (Engine Off)
Press [OK] button, after typing the number.
Read : GNE123AVR12345678
Write :
Ok
Cancel

mcx30.com